Urban Storm Drainage Criteria Manual
VOLUME 2, CHAPTER 11

CULVERTS AND BRIDGES

November 2025

MHFD
MILE HIGH FLOOD DISTRICT

CHAPTER 11: CULVERTS AND BRIDGES

Table of Contents

1.0 Introduction and Overview 1

2.0 Required Design Information 3

2.1 Planning 3

2.1.1 Drainage Master Plan 3
2.1.2 Safety 3
2.1.3 Structure Selection Report 4
2.1.4 Location and Alignment 5

2.2 Environmental Permitting 5

2.2.1 Wetlands 5
2.2.2 Floodplain Permitting 5
2.2.3 Construction Dewatering 5
2.2.4 Stormwater Permitting 6
2.2.5 Aquatic Organism Passage 6

2.3 Hydrology & Hydraulics 8

2.3.1 Design Flood Frequency and Discharge 8
2.3.2 Allowable Headwater Depth for Culverts 8
2.3.3 Tailwater Depth for Culverts 9
2.3.4 Allowable Outlet Velocity for Culverts 9
2.3.5 Culvert Design Details 10

3.0 Culvert Hydraulics 12

3.1 Key Hydraulic Principles 12

3.1.1 Energy and Hydraulic Grade Lines 13
3.1.2 Inlet and Outlet Control 14

3.2 Energy Losses 17

3.2.1 Inlet Losses 17
3.2.2 Friction Losses 18
3.2.3 Outlet Losses 19
3.2.4 Total Losses 19

4.0 Culvert Sizing and Design 20

4.1 HY-8 20

4.2 HEC-RAS 20

4.3 Design Considerations 21

4.3.1 Culvert Profile 21
4.3.2 Minimum Culvert Diameter 21
4.3.3 Limited Headwater 21
4.3.4 Culvert Outlet 22
4.3.5 Minimum Velocity 22
4.3.6 Culvert Shape 22

5.0 Culvert Inlets 23

5.1 Types of Inlets and Appurtenant Structures 25

5.1.1 Headwalls 25
5.1.2 Wingwalls 25
5.1.3 Aprons 26
5.1.4 Special Inlets 26

5.2 Inlet Protection 30

5.2.1 Debris Management 30
5.2.2 Buoyancy 31

5.3 Safety Grates 31

5.3.1 Culvert Entrances with Design Flows up to 300 CFS 32
5.3.2 Design Flows Exceeding 300 CFS including Box Culvert Entrances 33
5.3.3 Outlet Grating 35
5.3.4 Collapsible Grating 36
5.3.5 Upstream Debris Collectors 36

6.0 Outlet Protection 37

7.0 Bridges 38

7.1 General 38

7.2 Backwater and Hydraulic Analysis 39

7.3 Freeboard 40

7.4 Bridge Scour Analysis 40

8.0 Design Example 43

9.0 Culvert Checklist 46

10.0 References 47

Figures

Figure 11-1. Illustration of terms for open channel flow 13
Figure 11-2. Illustration of terms for closed conduit flow 14
Figure 11-3. Inlet control – unsubmerged inlet 15
Figure 11-4. Inlet control – submerged inlet 15
Figure 11-5. Outlet control – partially full conduit 16
Figure 11-6. Outlet control – full conduit 16
Figure 11-7. Inlet with headwall and wingwalls 25
Figure 11-8. Typical headwall-wingwall configurations 25
Figure 11-9. Examples of side-tapered and slope-tapered improved inlets 29
Figure 11-10. Conceptual MHFD Safety Grate 35
Figure 11-11. Hydraulic cross section locations *(Source: HEC-RAS Hydraulic Reference Manual)* 39
Figure 11-12. Cross section locations and ineffective flow areas *(Source: HEC-RAS Hydraulic Reference Manual)* 40
Figure 11-13. Example of scour envelope, as calculated with HEC-RAS *(Source: HEC-RAS Hydraulic Reference Manual)* 41
Figure 11-14. Adding a crossing in HY-8 45
Figure 11-15. HY-8 output 45

Tables

Table 11-1. Maximum headwater depth to culvert diameter (or height) ratios (HW/D) (CDOT, 2019) 9
Table 11-2. Manning's roughness coefficients for common culvert materials 13
Table 11-3. Entrance loss coefficients (FHWA, 2012) 24
Table 11-4. Types of safety grate required for circular pipes of varying diameters and headwater to depth ratios (HW/D) 32
Table 11-5. HY-8 program inputs 44

1.0 INTRODUCTION AND OVERVIEW

Photograph 11-1. Single-cell box culvert structure with recreational path set above minor flood elevation

This chapter addresses the hydraulic function of culverts and bridges, which provide conveyance of surface water through embankments such as roadways and railroads. Structural and geotechnical considerations, such as the design requirements to support loads, are not addressed in this chapter. This chapter primarily focuses on design of culverts (Photograph 11-1) and includes a brief overview of considerations related to bridges. When designing a culvert or bridge that will include a shared-use path, also see the *Stream Access and Recreational Channels* chapter of the Urban Storm Drainage Criteria Manual (USDCM).

A careful approach to designing culverts and bridges is essential, because crossings often significantly influence upstream and downstream flood risks, floodplain management, and public safety. Multiple factors affect the hydraulic capacity and overall performance of a culvert or bridge. These include the size, shape, slope, material, inlet configuration, outlet protection, and other variables. Sizes and shapes of culverts vary from small circular pipes to large arch sections used in place of a bridge.

In addition to the primary function of conveying flow, culverts may create conditions upstream that are suitable for wetland growth (Photograph 11-2). This may create additional maintenance needs to manage sediment and vegetation but also provides ecological value.

Incorporate aesthetic considerations and landscaping into designs to integrate the culvert or bridge with the surrounding landscape. This can be achieved through thoughtful grading, landscaping, and wall design, including finishing.

Photograph 11-2. Culverts frequently provide compatible conditions for upstream wetland growth.

The Federal Highway Administration's (FHWA's) *Hydraulic Design of Highway Culverts*, Hydraulic Design Series No. 5 (HDS 5, FHWA, 2012) provides much of the information needed to design culverts according to the procedures in this chapter. The Colorado Department of Transportation's (CDOT's) *Drainage Design Manual, Chapter 9: Culverts* also provides information on design criteria and procedures, largely following HDS 5 (CDOT, 2019). This chapter provides examples of some of the most common culvert scenarios; however, this chapter does not republish many of the nomographs, equations, and technical background provided by FHWA's HDS 5 since it is readily available on the internet. Refer to this FHWA publication for special cases, larger culvert sizes, or specific technical topics not covered in this chapter.

Bridge design criteria are provided by a series of FHWA publications listed in Section 7.0. CDOT's *Drainage Design Manual, Chapter 10: Bridges* also provides information on design criteria and procedures, largely following FHWA methods (CDOT, 2019).

Definitions of Culverts and Bridges

A culvert is any structure not classified as a bridge, that provides an opening under a roadway, or other types of access or utility. A culvert is defined as the following:

- A structure that is usually hydraulically designed to take advantage of submergence to increase hydraulic capacity;
- A structure used to convey surface runoff through embankments;
- A structure, as distinguished from bridges, usually covered with embankment and composed of structural material around the entire perimeter, although some are supported on spread footings with the streambed serving as the bottom of the culvert; and
- A structure that is 20 feet or less in centerline span-width between extreme ends of openings for multiple boxes. However, a structure hydraulically designed as a culvert is treated as a culvert in this chapter, regardless of its span.

Bridges are legally defined (23 CFR 650.403) as structures with a centerline span of 20 feet or greater; however, this legal definition is primarily used to identify structures that are subject to federal inspection oversight rather than to distinguish between bridges and culverts. Structures designed hydraulically as culverts are treated as culverts in this chapter regardless of the span-width. CDOT uses the 20-foot width threshold to distinguish between minor structures (less than or equal to 20-foot span) and major structures (greater than 20-foot span).

The decision between using a large culvert structure or a bridge to span a stream must consider multiple factors, including (but not limited to) safety, cost, aesthetics, maintenance, environmental, and structural factors. The hydraulic analysis of alternative structures aids in this decision (CDOT, 2019).

2.0 REQUIRED DESIGN INFORMATION

For hydraulic design of a culvert or bridge, consider the factors detailed in this section at a minimum. Culvert and bridge projects also require structural, geotechnical, transportation engineering, and landscape architecture, which are beyond the scope of this chapter. Use a multi-disciplinary design team including these area of expertise to ensure all aspects of the design have appropriate attention.

2.1 PLANNING

2.1.1 Drainage Master Plan

Determine how the proposed structure fits into the relevant drainage master plans and evaluate if there are other community objectives (recreational access, etc.) in addition to conveyance to consider. For example, box culverts can also serve as below-grade crossings, with one cell elevated to act as a pedestrian underpass during dry weather and more-frequent storm events, while conveying flows only during larger storm events. (see the *Stream Access and Recreational Channels* chapter for criteria). Additionally, a culvert can be used to discharge at a controlled flow rate while the area upstream from the culvert is used for flood detention storage to attenuate runoff. In such a case, the embankment that the culvert penetrates should effectively be designed as a dam.

Verify that upstream and downstream property owners are not adversely affected by changes in hydraulic conditions. When restricting flow to attenuate major events, evaluate the area of potential flooding upstream of the new culvert. If a culvert is replaced by one with more capacity, evaluate the downstream effects of the increased flow. Ensure consistency with existing Mile High Flood District (MHFD) planning studies.

2.1.2 Safety

Hydraulics at culverts and bridges have the potential to create safety hazards. As a part of planning and design, the engineer must evaluate the safety of the structure in the context of the surroundings. As examples:

- Are there specific public safety issues related to the culvert or bridge location, such as proximity to parks or other public areas that have a bearing on the structure design? For culverts, a key question is whether or not to include a safety/debris grate at the culvert inlet (grates should be avoided at culvert outlets). See Section 5.3 for further discussion of safety grates.
- Culverts often are located at the bottom of steep slopes. Large culvert openings, in particular, can create a potential falling hazard, which poses risk to the public. Consider what the area looks like when flooded and if areas exist where a person or vehicle may unknowingly enter deep water. In such cases, fencing (or guardrails for roadway applications) is recommended for public safety.
- Understanding where runoff will go when the roadway overtops is a critical safety consideration. In some cases, the low point of the road may be in a different location than the culvert, which can result in flooding of areas outside of the regulatory floodplain, which is typically defined based on clearwater flows with unobstructed culverts and bridges. This is critical analysis for culverts that are designed to overtop on to the street above a certain design event and for culverts in areas where debris blockage may potentially occur. Evaluate the overflow path for stability under overtopping conditions and provide armoring to minimize potential for erosion. Two-dimensional modeling may be needed to evaluate complex overland flow paths.

- To reduce the potential for urban camping in culverts and bridges that have concealed areas, keep entrances and exits unobstructed and visible from the banks upstream or downstream of the culvert. Manage vegetation so that entrances and exits are not obscured and provide maintenance access to allow for inspection of the culvert. Activating the area by incorporating a pedestrian trail may also help to reduce the potential for urban camping. Visibility and activity are two of the best ways to minimize urban camping. See section 5.3 when considering the installation of a safety grate to discourage urban camping.

2.1.3 Structure Selection Report

When a structure will span more than 20 feet, prepare a Structure Selection Report (SSR) to provide the rationale for selecting a culvert over a bridge, or vice versa. The SSR documents key factors – including site requirements, public safety, and hydraulics – that inform the recommended selection for a major drainageway crossing.

Examples of structure types include reinforced concrete box culverts (RCBCs), concrete arch culverts, and bridges with piers. Examples of configuration parameters may include the number of cells, openings, and/or piers, and the relative inverts of each. Examples of dimensions may include the diameter or width and height (for culverts) or the opening widths and pier diameters (for bridges).

Structure Selection Report

When developing a SSR, follow guidance in CDOT's Drainage Design Manual, Chapter 4: Documentation (CDOT, 2019) and CDOT's Structure Selection Report QA Checklist (CDOT, 2023). For projects involving local (non-federal/non-state) road crossings of major drainageways, provide the following at a minimum:

- Location and vicinity map.
- Description of the existing structure, if applicable.
- Required roadway cross section based on roadway classification, along with the horizontal and vertical alignment.
- Required accommodation for grade-separated regional trails under the deck.
- Discussion of traffic impacts during construction, if applicable.
- Discussion of utilities and potential conflicts.
- Discussion of hydraulics, including design flows, geomorphic and sediment transport considerations, and regulatory impacts.
- Discussion of environmental concerns.
- Discussion of geotechnical concerns. A geotechnical report addressing these matters is required.
- Discussion of selection criteria, which should be based on the preceding information.
- Development and evaluation of several viable alternatives for the proposed crossing.
- Cost estimates for each alternative.
- Recommendation of a structure based on the selection criteria.
- Conceptual drawings of the selected structure. Drawings should fully define the geometry of the structure but need not include structural details or reinforcement.

2.1.4 Location and Alignment

At a planning level, consider the following factors when evaluating the location and alignment:

- Identify all stream crossings, springs, low areas, gullies, and impoundment areas created by the new roadway embankment and assess these locations for potential culvert locations.
- Locate and align culverts in a way that preserves the existing stream alignment and provides the stream with a direct entrance and exit. Avoid abrupt changes in direction at either end that may increase head loss and reduce capacity, making a larger structure necessary.
- Carefully consider bends relative to head losses and potential for debris accumulation and minimize abrupt changes in alignment.
- Where water must be turned into a culvert at an indirect angle, use headwalls, wingwalls, and aprons with configurations similar to those in Figure 11-8 as protection against scour and to provide an efficient inlet.
- Consider maintenance access to the culvert entrance and exit.

2.2 ENVIRONMENTAL PERMITTING

2.2.1 Wetlands

Environmental permitting is typically required for culvert and bridge projects due to their association with streams. For example, Section 404 of the Clean Water Act, administered by the United States Army Corps of Engineers (USACE), regulates construction activities in jurisdictional waters of the United States, including adjacent wetlands. Consult with local USACE representatives in the early stages of crossing design to assess the permitting requirements. State and local wetland regulations also may apply.

2.2.2 Floodplain Permitting

Culverts and bridges also often have regulatory floodplain implications. In cases where a No-rise Certification is not achievable, a Conditional Letter of Map Revision (CLOMR) and/or Letter of Map Revision (LOMR) is often required when a new culvert or bridge is installed and for major retrofit projects. For culvert and bridge projects in streams that may affect base flood elevations or the extents of regulatory floodplains, a CLOMR is advisable (and often required) to understand how the proposed project is likely to affect the floodplain and whether any insurable structures are adversely impacted. Projects that require a CLOMR through FEMA must provide an Endangered Species Act certification. Consult with the local jurisdiction early in the planning stages of the project to determine floodplain permitting requirements.

2.2.3 Construction Dewatering

Construction dewatering is often required for construction of culverts and bridges. Construction dewatering is regulated by the Colorado Public Health and Environment (CDPHE) through the General Permit for Discharges from Short-term (<2 year) Construction Dewatering Activities. If existing contamination is present in or around the area that will be dewatered, coverage under a remediation permit may be required.

2.2.4 Stormwater Permitting

For culvert and bridge projects that disturb more than 1 acre, coverage under the CDPHE's General Permit for Stormwater Discharges Associated with Construction Activities is required, and the permittee must prepare a Stormwater Management Plan (SWMP). Local governments and other Municipal Separate Storm Sewer System (MS4) permittees also have stormwater permit requirements, some of which apply to disturbances smaller than an acre.

2.2.5 Aquatic Organism Passage

The South Platte River watershed is home to diverse aquatic organisms, including trout in cold-water streams, smaller fish species throughout the eastern plains, and numerous other wildlife that move along riparian corridors. Road and pedestrian crossings that are located in or across these corridors can result in the permanent loss and fragmentation of important aquatic and riparian habitats. Where practical, crossings consolidate crossings to limit these impacts. When a stream crossing is required, consider the ecological impact and maintain or restore ecological continuity through riparian corridors to the extent practical.

In some settings, the ability of the culvert or bridge to accommodate aquatic organism passage is an important design consideration. Grade changes and control structures in the vicinity of hydraulic structures, high velocities through constrictions, and other factors may inhibit the ability of aquatic organisms to move upstream through crossings. When planning a stream crossing where aquatic organisms passage is an objective or requirement, consult with federal and state fish and wildlife agencies such as the U.S. Fish and Wildlife Services and Colorado Parks and Wildlife (CPW) early in the planning process.

Analyze stream crossing hydraulics from low flows to bankfull flows to verify that the design flow depth and velocity are conducive to the passage of the target species. Swimming speeds and required depths for various species have been estimated and included in multiple design guidance documents.

Existing crossings can be retrofitted to improve aquatic organism passage by increasing the tailwater depth and/or introducing roughness elements through the bottom of the crossing. In the case of retrofits, maintain or increase the culvert design capacity to avoid adverse hydraulic and geomorphic conditions that may affect aquatic organism passage.

Aquatic Organism Passage Design Considerations

Bridges and other floodplain-spanning crossings have the least impact on aquatic habitats. As these large crossings are often not economical, culverts are typically installed at smaller stream crossings. There are many ways in which culverts can impede aquatic organism passage, including; vertical barriers at the culvert inlet or outlet due to scour or differences in grade, high velocities at the outlet and through the length of the culvert, shallow depths through the culvert and the lack of areas of refugia, abrupt changes in the hydraulics at the culvert inlet or outlet (flow acceleration and turbulence), as well as blockage due to debris build-up. Longer culverts generally present greater challenges to movement because the artificial environment is a longer. Avoid these impediments by considering fish passage and passage of other riparian species in design.

Maintaining geomorphic continuity through a crossing reduces the risk of habitat fragmentation.

Where bridge crossings are not practical, alternative structures such as three-sided or embedded culvert crossings may provide for aquatic organism passage if designed correctly. At a minimum, new crossings should span the bankfull channel width and maintain the creek slope, cross-section geometry, and bed material of the up- and downstream reaches. Material larger than the natural stream substrate may be required throughout the culvert to prevent the erosion of finer material during flood flows. Where the natural stream substrate cannot be continued through a crossing, sills, baffles, and other artificial roughness elements can reduce velocities, increase depths, and provide for important areas of refugia. Only consider these artificial roughness elements where the natural stream substrate cannot be continued through the crossing, or in instances of a retrofit to an existing crossing.

Refer to the following documents when designing stream crossings to limit the structure's impacts on aquatic organism passage.

- FHWA, 2010. Hydraulic Engineering Circular No. 26 (HEC-26): Culvert Design for Aquatic Organism Passage.
- FHWA, 2024. Aquatic Organism Passage at Highway Crossings: An Implementation Guide.
- U.S. Fish and Wildlife Service, 2024. Culvert Design Guidelines for Ecological Function.
- CDOT, 2019. Drainage Design Manual, Chapter 15: Water Surface Environment.
- ICON Engineering, 2025. Geomorphically Informed Stream Crossing Structures.
- Washington Department of Fish and Wildlife, 2003. Design of Road Culverts for Fish Passage.

Colorado Senate Bill 40 (33-5-101-107, CRS 1973 as amended) requires State agencies to obtain wildlife certification from CPW when the agency plans in-stream construction. While many projects do not require review from CPW, coordination with the agency may help determine target species and considerations to promote aquatic organism passage.

2.3 HYDROLOGY & HYDRAULICS

2.3.1 Design Flood Frequency and Discharge

For culverts that cross roadways, the design flood frequency is closely related to the pavement encroachment and road overtopping criteria presented in Tables 1-2, 1-3 and 1-4 in the *Policy* chapter. Most municipalities within MHFD have minimum design frequencies related to these tables that require culvert capacity for at least the 10-year event (and in some cases the 25-year event). However, for road and rail crossings of channels that drain a watershed of 130 acres or more, especially for arterial streets, freeways and critical crossings, a 100-year basis of design for conveyance (plus freeboard above the allowable headwater) is common.

Analyze scour and use a scour design frequency no more frequent than the design flood frequency used for hydraulic analysis. In some cases (e.g., bridge design), also analyze a less frequent flood (e.g., 200- or 500-year event) for scour. Please note that state and federal standards apply to relevant highway projects. For non-federal or state projects, select the design recurrence interval based on the criteria set forth in this manual in conjunction with local requirements and criteria for culvert sizing and road overtopping. Apply the more stringent of the applicable criteria if there are conflicting requirements.

The required hydraulic capacity (i.e., design flow) is based on the design flood frequency and the resulting design flow rate calculated for the watershed draining to the proposed culvert (see the *Runoff* chapter for information on hydrologic calculations). Design the structure to operate within acceptable limits of uncertainty of the design discharge by providing freeboard between the design headwater elevation and the point at which overtopping occurs for culverts or the low chords of bridges.

In some cases, culverts passing beneath rail may need to be designed to avoid surcharging beneath the rail (Union Pacific Engineering Department, 2019 and Union Pacific Railroad – BNSF Railway, 2016). When designing a crossing beneath a railroad, coordinate with representatives from the railroad early in planning to understand any special criteria that apply.

Culverts for lower-traffic roads may be designed to overtop in a 100-year event, while bridges are typically designed to pass the 100-year peak flow while allowing for freeboard. Consult local governing criteria for allowable overtopping frequencies.

2.3.2 Allowable Headwater Depth for Culverts

Culverts frequently constrict the natural stream flow, which causes a rise in the upstream water surface. The elevation of the upstream water surface is referred to as the headwater elevation. The depth of headwater is measured from the invert of the culvert inlet to the headwater elevation for a specified flow rate. In selecting the design headwater elevation, consider the following:

1. The headwater depth/culvert diameter ratio (*HW/D*) should not exceed the maximum values listed in Table 11-1 for the 100-year peak flow unless justification is provided for a greater ratio and sufficient measures are taken to protect the culvert inlet (for example, a concrete headwall). Piping failure can be of concern for deep headwater depths, especially if there are animal burrows in the embankment.
2. Assess the impacts caused by exceeding the design headwater depth, including:
    a. Hazards to human life and safety.
    b. Potential damages to the culvert, embankment stability, and roadway.
    c. Traffic interruption in the event of roadway overtopping.
    d. Anticipated upstream and downstream flood risks, for a range of return frequencies.

3. Evaluate the topography surrounding the culvert entrance relative to design headwater elevation. Design the culvert so that the headwater elevation will not result in runoff spilling over topographic drainage divides and creating unintended split flow conditions or overflow paths.

Table 11-1. Maximum headwater depth to culvert diameter (or height) ratios (HW/D) (CDOT, 2019)

Range of Diameter or Height of Culvert	Maximum HW/D
< 36 inches	2.0
36 – 60 inches	1.7
> 60 inches and < 84 inches	1.5
84 inches to < 120 inches	1.2
120 inches or larger	1.0

2.3.3 Tailwater Depth for Culverts

Tailwater is the depth of flow in the downstream channel, measured from the invert of the culvert outlet to the water surface level (typically assuming normal flow in the channel downstream of the culvert). Knowledge of tailwater depth is critical for culvert design because a submerged outlet may cause the culvert to flow full rather than partially full. In general, tailwater depths should be computed for the same design storm frequencies used for culvert design.

In some cases where there is a confluence with a waterbody draining a much larger watershed that controls tailwater conditions, the joint probability of the culvert and the waterbody draining a much larger watershed experiencing concurrent peak flooding may be a much lower probability than the design event used for the culvert. In these cases, design engineers may submit hydrologic analysis evaluating the joint probability of flooding to justify a tailwater depth that is compatible with the design storm frequency used for sizing the culvert. Hydrologic Engineering Circular No. 19 (HEC-19), Highway Hydrology: Evolving Methods, Tools, and Data provides guidance on evaluating coincident frequency of flooding at stream confluences (FHWA, 2023).

Conduct a field inspection of the downstream channel to determine whether there are obstructions that may influence the tailwater depth and to determine an appropriate roughness value to use for tailwater computations. Tailwater depth may be controlled by several factors, including the stage in a contributing stream, headwater/backwater from structures downstream of the culvert, reservoir water surface elevations, or other downstream features.

Calculate tailwater depth using a computer program, such as HEC-RAS or HY-8, that can represent tailwater effects from user-defined downstream channel geometry. In some cases normal depth calculations for the downstream channel for the design event may be sufficient to establish a design tailwater depth (this is one of the ways that HY-8 can develop a tailwater rating curve).

2.3.4 Allowable Outlet Velocity for Culverts

The outlet velocity of a culvert, measured at the downstream end of the culvert, is usually higher than the maximum velocity that a natural channel can withstand without experiencing significant erosion of the bed and/or banks. Most culverts require outlet protection (typically riprap or a stilling basin), and this is often overlooked during design. See the *Hydraulic Structures* chapter in Volume 2 of the USDCM for criteria and guidance for outlet protection for culverts.

Permissible velocities at the outlet will depend upon streambed type, and the type of energy dissipation (outlet protection) that is provided. As a general rule, the velocity at the downstream edge of a project right-of-way or downstream area of influence should not be greater than the pre-construction velocity.

If the outlet velocity of a culvert is too high, the velocity may be reduced by decreasing the slope or increasing the barrel roughness, since slope and roughness are the principal factors affecting the outlet velocity. Variations in shape and size of a culvert seldom have a significant effect on the outlet velocity. If changing the barrel slope or roughness does not provide a satisfactory reduction in outlet velocity, it may be necessary to incorporate some type of outlet protection or energy dissipation device.

2.3.5 Culvert Design Details

Culvert design should always include preparation of hydraulic profiles through the culvert for the range of design events analyzed and assessment of potential flood or erosional hazards due to overtopping. Plans should also show the following:

- Culvert size and geometry.
- Culvert design flows and recurrence intervals.
- Culvert material.
- Alignment, grade, and length of culvert.
- Abrasion and corrosion protective measures, if required.
- Culvert inlet design, including headwall and wingwalls, as applicable.
- Culvert end treatment and erosion protection.
- Culvert overflow frequency and overflow path.
- Amount and type of cover material required.
- Erosion control for stabilization of disturbed slopes.

Photograph 11-3. A three-cell box culvert on Wonderland Creek.

Hydraulic and Geomorphic Design Considerations

Hydraulic and geomorphic design considerations include the following:

- What are the impacts of various culvert sizes, dimensions, and materials on upstream and downstream flood risks, including the implications of embankment overtopping?
- What type of sediment load and bed load can be anticipated for the culvert? For streams with a heavy bed load, abrasion and debris blockage can be of concern. For culverts with milder slopes or abrupt changes to a flatter grade within the culvert, sediment deposition can be problematic and lead to increased maintenance frequency. If the culvert is in an area where there is potential for significant debris (mountainous terrain, pine beetle kill areas, recently burned areas, etc.), apply appropriate conservative assumptions for blockage and overflow paths.
- How does the culvert affect the hydraulics and geomorphology of the stream? Maintain hydraulic and sediment transport continuity through a crossing by sizing structures to span the bankfull channel when feasible, and consider configurations using multiple culverts to maintain hydraulic conveyance under flood conditions and minimize backwater effects. These practices help to reduce sediment deposition upstream of (and in) the culvert and avoid constriction of flows that can lead to costly downstream energy dissipation and erosion control measures.
- Do culvert hydraulics create conditions favorable for sediment deposition? Sediment deposits in culverts may occur due to the following conditions:
    - At low and moderate flow rates, the culvert cross section may be larger than that of the stream, so the flow depth and sediment transport capacity is reduced.
    - Point bars form on the inside of stream bends. Culvert inlets placed at bends in the stream may be subject to deposition in the same manner. This effect is most pronounced in multiple-barrel culverts with the barrel on the inside of the curve often becoming almost totally plugged with sediment. Consider the effect of the culvert shape, size, and skew of the alignment to minimize potential for sediment deposits and plugging and improve floodplain connectivity.

Instream structures upstream of the inlet or depressing a low flow channel in the culvert can help to concentrate flows at the entrance and through the culvert. Concentrating flows through culverts increases velocity and may reduce sediment and debris accumulation near a culvert entrance; however, this also may require downstream energy dissipation and channel stabilization measures for natural-bottom culverts.

3.0 CULVERT HYDRAULICS

3.1 KEY HYDRAULIC PRINCIPLES

This chapter is based on the assumption that the reader has a basic working knowledge of hydraulics and is familiar with the Manning's Equation (Equation 11-1), the Continuity Equation (Equation 11-2), and the energy equation for steady incompressible flow (Equations 11-3 and 11-4):

$$Q = \frac{1.49}{n} A R^{2/3} S^{1/2}$$

Equation 11-1

Where:
Q = flow rate or discharge (cubic feet per second)
n = Manning's roughness coefficient (see Table 11-2)
A = cross-sectional area of flow (ft^2)
R = hydraulic radius (ft)
S = longitudinal slope (ft/ft)

$$Q = v_1 A_1 = v_2 A_2$$

Equation 11-2

Where:
Q = flow rate or discharge (cfs)
v = velocity (ft/s)
A = cross-sectional area of flow (ft^2)

Subscripts refer to two different locations within a culvert or channel between which flow is constant.

$$E_1 + losses = E_2$$

Equation 11-3

$$\frac{v_1^2}{2g} + \frac{p_1}{\gamma} + z_1 + Losses = \frac{v_2^2}{2g} + \frac{p_2}{\gamma} + z_2$$

Equation 11-4

Where:
E = energy of flow, expressed as head (ft)
v = velocity (ft/s) - Note: $v^2/(2g)$ = velocity head (ft)
g = gravitational acceleration (32.2 ft/s^2)
p = pressure (lb/ft^2)
γ = specific weight of water (62.4 lb/ft - Note: p/γ = pressure head or depth of flow (ft)
z = height above datum (ft)
Losses = hydraulic losses (ft) due to pipe or channel friction, bends, junctions, contractions/expansions, etc. between two points being evaluated along a flow line

Subscripts refer to two different locations within a culvert or channel between which flow is constant.

Table 11-2. Manning's roughness coefficients for common culvert materials

	Reinforced Concrete Pipe (RCP)	Aluminized Steel Pipe (ASP)	Polymer Coated Steel Pipe	Corrugated Metal Pipe (CMP)*	Polyvinyl Chloride Pipe (PVC)	High Density Polyethylene (HDPE) Pipe
Manning's Roughness Coefficient	0.013	0.013	0.013	0.024	0.011	0.012

* *Manning's roughness coefficient varies based on diameter and height of corrugation for some types of corrugated aluminum or steel pipes. See American Iron and Steel Institute, 1980 or consult with manufacturer to determine appropriate roughness value. For values that vary from this table, provide documentation of basis for Manning's roughness coefficient in design submittals.*

3.1.1 Energy and Hydraulic Grade Lines

The concepts of energy grade line (EGL) and hydraulic grade line (HGL), and related terms, are illustrated for open channel flow and closed conduit flow in Figure 11-1 and Figure 11-2, respectively.

Open Channel Flow

The EGL, also known as the line of total head, is the sum of velocity head ($v^2/2g$), the depth of flow or pressure head (p/g), and elevation above an arbitrary datum represented by the distance (z). The energy grade line slopes downward in the direction of flow by an amount equal to the energy gradient (H_L/L), where H_L equals the total energy loss over the distance L.

The HGL, also known as the line of piezometric head, is the sum of the depth of flow or pressure head (p/g), and the elevation (z). The HGL does not include the velocity head.

For open channel flow, the term p/g is equivalent to the depth of flow and the hydraulic grade line is the same as the water surface shown on Figure 11-1.

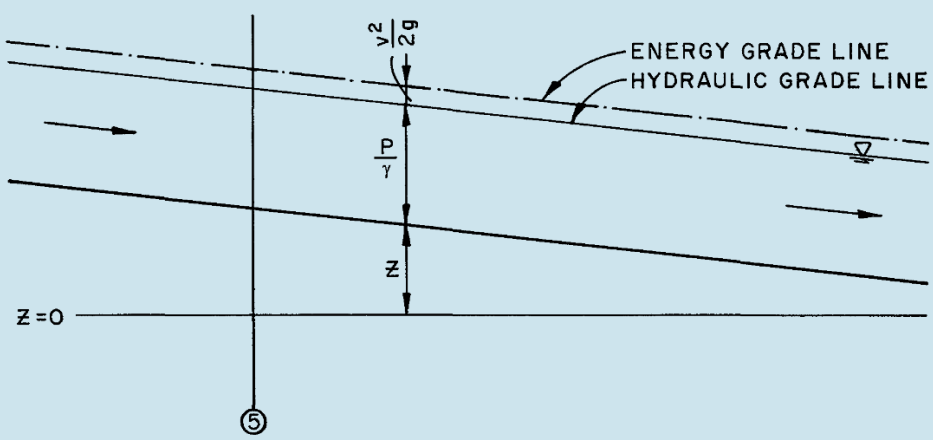

Figure 11-1. Illustration of terms for open channel flow

Closed Conduit Flow

While it is preferable to design culverts for open channel flow conditions (i.e., non-pressurized flow), when a culvert is designed with a headwater depth exceeding the top of the culvert (not uncommon), pressurized flow may develop under some tailwater conditions and/or during events that exceed the design capacity of the culvert. For pressurized flow in closed conduits, p/g is the pressure head and the hydraulic grade line is above the top of the conduit, provided that the pressure relative to atmospheric pressure is positive (see Figure 11-2).

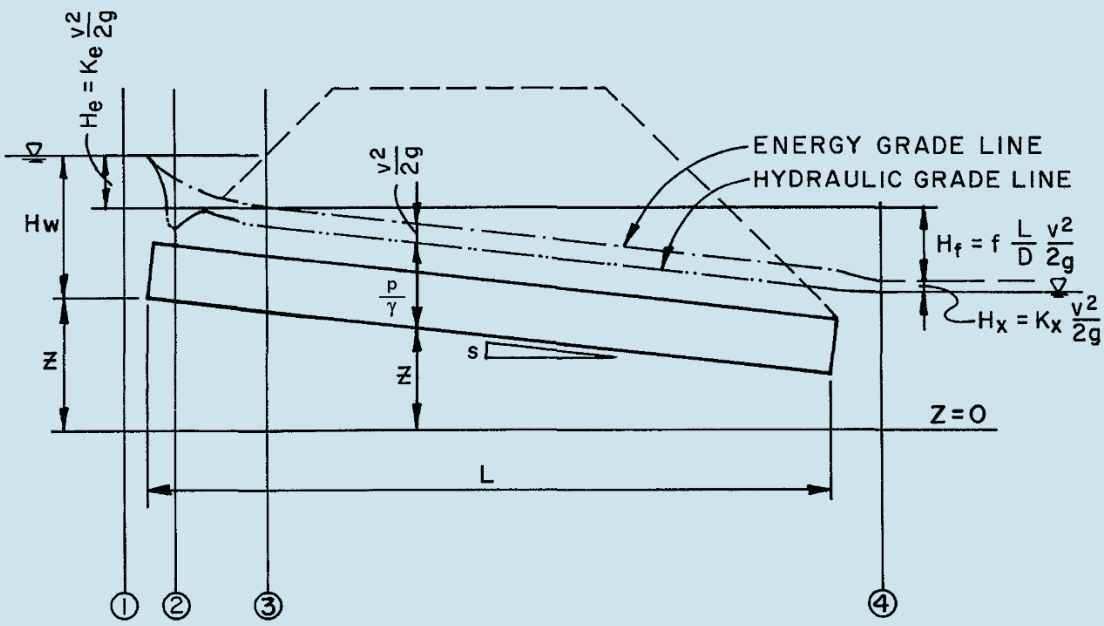

Figure 11-2. Illustration of terms for closed conduit flow

For the headwater at entrance of a culvert (Point 1 on Figure 11-2) the velocity is commonly considered minimal, and the energy grade line and hydraulic grade line are nearly the same. As water enters the culvert at the inlet, the flow is contracted by the inlet geometry causing a loss of energy (Point 2). As a turbulent velocity distribution is reestablished downstream of the entrance (Point 3), a loss of energy occurs due to frictional resistance from the culvert. In short culverts, the entrance losses are likely to be high relative to the friction loss in the barrel of the culvert. At the culvert exit (Point 4), there are additional losses due to turbulence as the flow expands and is retarded by the tailwater in the downstream channel.

3.1.2 Inlet and Outlet Control

There are two basic types of flow conditions in culverts: (1) *inlet control* and (2) *outlet control*. For each type of control, the hydraulic capacity of the culvert is determined based on different combinations of factors. Over a range of event frequencies (and even within an event as the hydrograph rises and falls), most culverts experience both inlet and outlet control conditions at times. The determination of actual flow conditions can be difficult; therefore, the designer must check for both types of control and design for the most adverse condition (i.e. greatest headwater depth between the two methods).

Inlet Control

Inlet control occurs when the energy losses at the culvert entrance dictate how much flow a culvert can convey. A culvert operates under inlet control when the flow capacity of the culvert is controlled by these factors:

- Depth of headwater,
- Inlet edge configuration, and
- Cross-sectional area and geometry of culvert opening.

With inlet control, the culvert barrel usually flows only partially full. Inlet control for culverts can occur under unsubmerged or submerged conditions.

Unsubmerged Inlet: The headwater depth is not sufficient to submerge the top of the culvert and the culvert invert slope is supercritical, as shown in Figure 11-3.

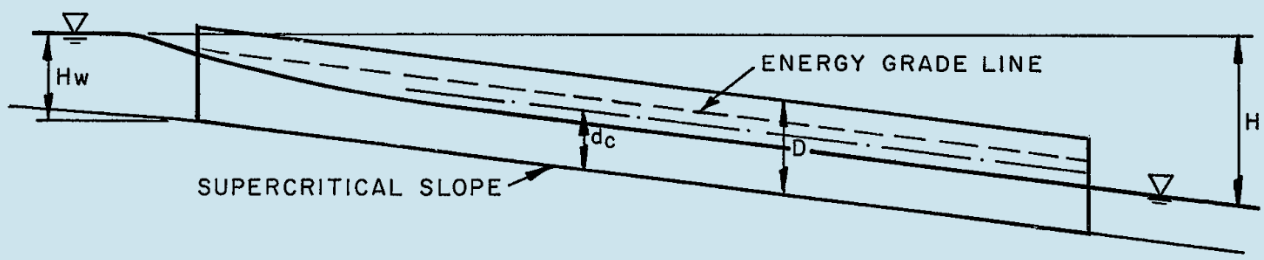

Figure 11-3. Inlet control – unsubmerged inlet

Submerged Inlet: The headwater submerges the top of the culvert, and the pipe does not flow full (Figure 11-4). This is the most common condition of inlet control.

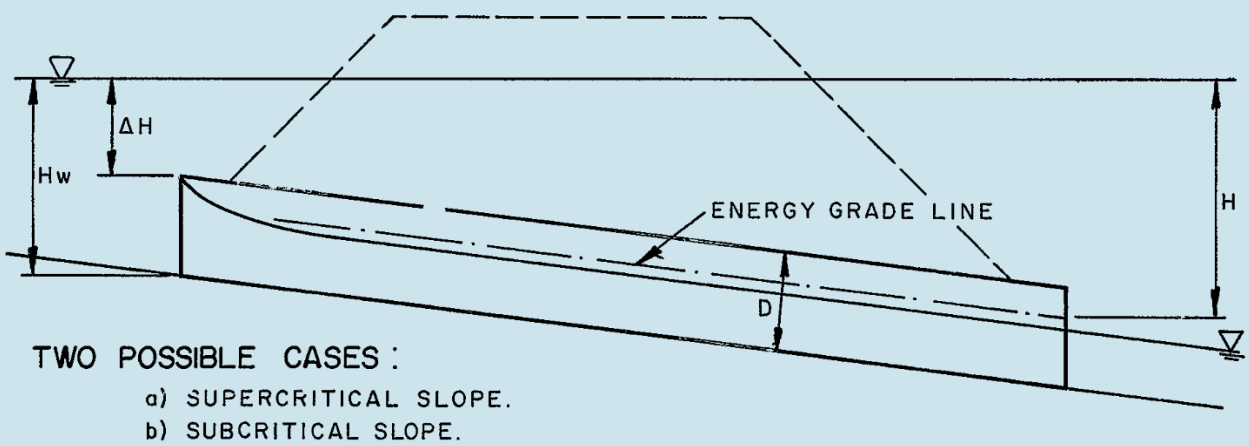

Figure 11-4. Inlet control – submerged inlet

A culvert flowing under inlet control is sometimes referred to as a “hydraulically short” culvert.

Outlet Control

Outlet control refers to all head loss mechanisms other than those that occur at the culvert inlet. These outlet control mechanisms include head loss attributed to pipe friction, bends, expansion at the culvert outlet, and tailwater. Outlet control is the common term used when these losses dictate the capacity of a culvert, (FHWA, 2005). Conditions that may cause outlet control include high headwater, relatively flat culvert slope, or sufficiently long culvert length. With outlet control, culvert hydraulic performance is determined by the following factors:

- Depth of headwater,
- Inlet edge configuration,
- Cross-sectional area,
- Bends (if applicable),
- Culvert shape,
- Barrel slope,
- Barrel length,
- Barrel roughness, and
- Depth of tailwater.

Outlet control for culverts can occur under partially full or full conduit conditions.

Partially Full Conduit: The headwater depth is insufficient to submerge the top of the culvert, and the culvert slope is subcritical, resulting in the culvert flowing partially full (Figure 11-5). This is the least common condition of outlet control.

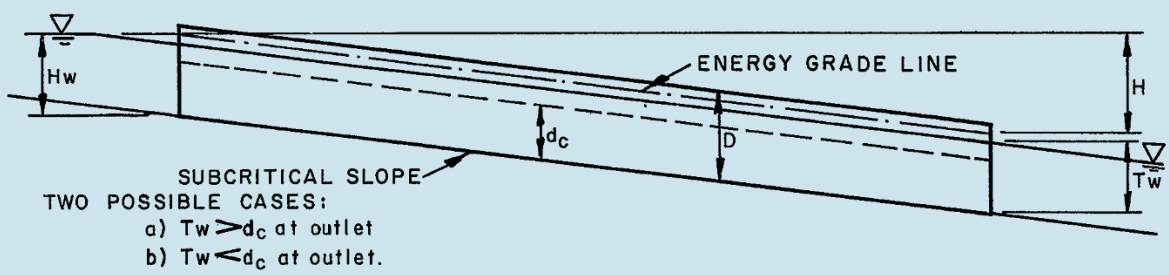

Figure 11-5. Outlet control – partially full conduit

Full Conduit: The culvert flows full along its length (Figure 11-6). This is the most common condition of outlet control.

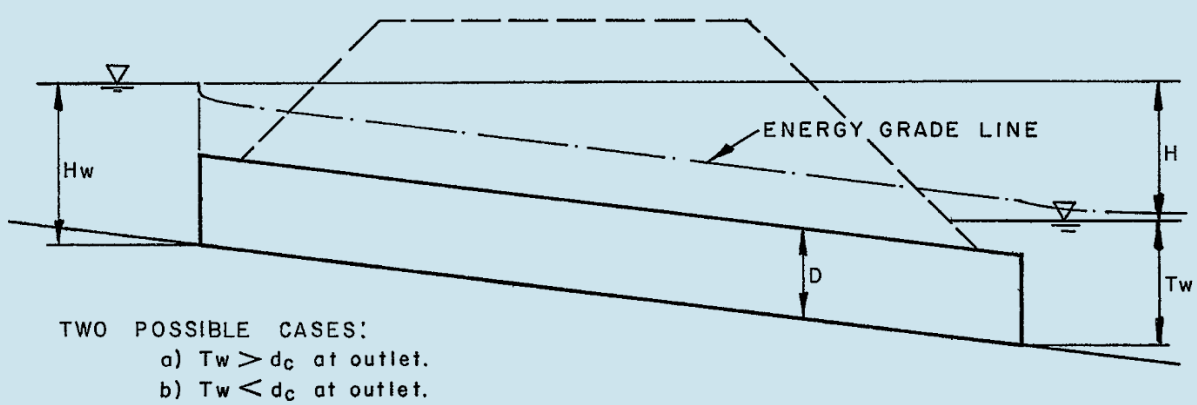

Figure 11-6. Outlet control – full conduit

A culvert flowing under outlet control is sometimes referred to as a "hydraulically long" culvert. With outlet control, factors that may affect performance for a given culvert size and headwater depth are barrel length, barrel roughness, and tailwater depth.

3.2 ENERGY LOSSES

Evaluate the following energy losses to determine the carrying capacity of a culvert:

- Inlet or entrance losses (Section 3.2.1)
- Friction losses through the culvert (Section 3.2.2)
- Bend losses (if applicable) (Section 4 of the Streets, Inlets, and Storm Drains chapter)
- Outlet (or exit) losses (Section 3.2.3)

It is noteworthy that the entrance losses in a culvert can be as important as the friction losses, particularly in short culverts.

3.2.1 Inlet Losses

For inlet losses, the governing equations are:

$$Q = CA\sqrt{2gH}$$

Equation 11-5

and

$$H_e = K_e \frac{v^2}{2g}$$

Equation 11-6

Where:

Q = flow rate or discharge (cfs)
C = contraction coefficient (dimensionless)
A = cross-sectional area (ft^2)
g = acceleration due to gravity (32.2 ft/s^2)
H = total head (ft)
H_e = head loss at entrance (ft)
K_e = entrance loss coefficient (dimensionless, see Section 5.0)
v = average velocity (ft/s

3.2.2 Friction Losses

Capacity based on headwater relevant to culvert rise

FHWA has determined that the orifice equation is not valid representation of actual capacity until the headwater (H) is at least 3 times the height (rise) of the culvert. For H less than 0.5 x rise, apply open channel minimum energy equations, and for 0.5 x rise < H < 3 x rise, use empirical best-fit equations. This methodology is programmed into HY-8.

Pipes Flowing Partially Full

Friction head loss for pipes flowing partially full can be determined from the Manning's equation reformulated to calculate head loss:

$$H_f = \left(\frac{29n^2L}{R^{4/3}}\right)\left(\frac{v^2}{2g}\right)$$

Equation 11-7

Where:

H_f = frictional head loss in culvert barrel (ft)
n = Manning roughness coefficient (dimensionless)
L = culvert length (ft)
R = hydraulic radius (ft, area/wetted perimeter)
A = cross-sectional area of culvert barrel (ft^2)
v = average velocity (ft)
g = acceleration due to gravity (32.2 ft/s^2)

Pipes Flowing Full

Friction head loss for turbulent flow in pipes flowing full can be determined from the Darcy-Weisbach equation:

$$H_f = f\left(\frac{L}{D}\right)\left(\frac{v^2}{2g}\right)$$

Equation 11-8

Where:

H_f = frictional head loss (ft)
f = friction factor (dimensionless)
L = culvert length (ft)
D = pipe diameter (ft)
v = average velocity (ft)
g = acceleration due to gravity (32.2 ft/s^2)

3.2.3 Outlet Losses

For outlet (or exit) losses, the governing equations are related to the difference in velocity head between the flow in the culvert and the flow in the channel downstream of the culvert. The downstream channel velocity is usually neglected, resulting in the outlet losses being equal to the velocity head of full flow in the culvert barrel, given by the following:

$$H_O = \frac{v^2}{2g}$$

Equation 11-9

Where¿

H_o = outlet head loss (ft)

V = average velocity in culvert barrel (ft)

g = acceleration due to gravity (32.2 ft/s^2)

3.2.4 .Total Losses

The following equation for head loss, the difference in the headwater and tailwater elevations, combines the relationships for entrance loss, friction loss, and outlet (or exit) loss:

$$H = \left[1 + K_e + \frac{29n^2L}{R^{4/3}}\right]\frac{v^2}{2g}$$

Equation 11-10

Where¿

H = difference in the headwater and tailwater elevations (ft)

K_e = entrance loss coefficient (dimensionless)

n = Manning's roughness coefficient (dimensionless)

L = culvert length (ft)

R = hydraulic radius (area/wetted perimeter)

v = average velocity (ft)

g = acceleration due to gravity (32.2 ft/s^2)

4.0 CULVERT SIZING AND DESIGN

The hydraulic design of culverts is typically accomplished using a computer program such as HY-8 or HEC-RAS, depending on the nature of crossing and upstream and downstream conditions. In addition to these public domain computer applications, numerous proprietary computer applications are also available for the hydraulic design of culverts. Proprietary software is discouraged because of the costs to local governments and/or MHFD to obtain licenses. MHFD and local governments may consider whether the specific proprietary software may be used on a case-by-case basis.

Capacity charts and nomographs were frequently used before the widespread use of computers; however, they are older methods that are now less commonly used. Capacity charts are no longer incorporated into FHWA's culvert design publications. FHWA's HDS 5 (2012), includes nomographs in Appendix C for a variety of culvert configurations, along with a detailed procedure for using nomographs for sizing culverts. These nomographs are graphical representations of the equations that are programmed into HY-8 and should produce comparable results to HY-8 when properly applied.

Computer Applications for Hydraulic Design of Culverts

The following public domain computer applications are available for free download at the addresses shown and are acceptable for use in conjunction with this chapter:

- Federal Highway Administration (FHWA) HY-8 Culvert Analysis Program (FHWA, 2024). http://www.fhwa.dot.gov/engineering/hydraulics/software/hy8/
- U.S. Army Corps of Engineers Hydrologic Engineering Center - River Analysis System (HEC-RAS): http://www.hec.usace.army.mil/software/hec-ras/

4.1 HY-8

HY-8 is a software program developed by FHWA as a culvert design tool. Input data include the range of design flows, tailwater channel characteristics, a roadway cross section, and an embankment template. HY-8 includes commercially available culvert sizes and materials and produces a performance curve and report for the culvert crossing. HY-8 is applicable to culvert crossings without upstream or downstream structures affecting hydraulics. HY-8 may be used for evaluation of tapered inlets, irregular shaped culverts, embedded culverts, and broken-back culverts. HY-8 is a useful tool when energy dissipator design is expected (FHWA, 2012).

4.2 HEC-RAS

HEC-RAS is a hydraulic analysis tool that can be applied to a stream reach with culverts and/or bridges to evaluate water surface profiles for user-specified peak flow rates. HEC-RAS is typically applied for steady flow analysis to design bridges and culverts; although, unsteady versions of HEC-RAS may be applicable in some cases where sediment transport is of interest. HEC-RAS should be used if any of the following apply:

- Crossing has a combination of bridges and culverts,
- Stream has upstream or downstream structures that affect hydraulics at crossing,
- A water surface profile is needed for the stream reach (for example, to evaluate backwater effects upstream), or
- Stream reach is part of a Federal Emergency Management Agency (FEMA) regulatory floodplain.

HEC-RAS has the same commercially available culvert alternative material and size ranges as HY-8. HEC-RAS also uses National Bureau of Standards equations from Appendix A of HDS 5 for inlet control computations (FHWA, 2012). HEC-RAS

and HY-8 provide similar solutions for submerged inlets and United States Geological Survey (USGS) flow types 4, 5, 6 and 7. For unsubmerged inlets and USGS flow types 1, 2, and 3, HEC-RAS carries the water surface profile through the structure and maintains the approach velocity.

4.3 DESIGN CONSIDERATIONS

The design of a culvert is more complex than simply sizing culvert dimensions, since other considerations arise with site-specific factors. The procedures for design in this manual only represent guidelines, since actual design considerations encountered are too varied and too numerous to be generalized. The process presented in this chapter is intended to help planners and designers think through a range of potential issues that may need to be addressed in the design process. Evaluate several combinations of entrance types, invert elevations, and pipe diameters to determine the most economic design that will meet the conditions imposed by topography and engineering constraints. The following sections discuss specific design considerations.

4.3.1 Culvert Profile

After determining the allowable headwater elevation, the tailwater elevation, and the approximate culvert length, assign culvert inlet elevations. Significant scour is less likely when the culvert has the same slope as the channel. To reduce the chance of failure due to scour, use invert elevations corresponding to the natural grade as a first trial. Investigate the flow conditions downstream from the culvert to determine if scour is likely and evaluate the area upstream of the planned culvert for the potential of debris or adverse consequences from increased sedimentation or backwater effects.

Design the culvert entrance and exit elevations and orientation to minimize changes to upstream and downstream flow characteristics to maintain sediment transport continuity through the embankment. Refer to MHFD's *Geomorphically Informed Stream Crossing Structures* guidance document (ICON Engineering, 2025) for additional information on maintaining geomorphic continuity at stream crossings.

Creating a drop structure at the outlet of the culvert and with a depressed basin beneath the drop, as shown in drop structure details in the *Hydraulic Structures* chapter, establishes a sediment and debris collection area that minimizes the risk of blockage in front of the culvert outlet.

4.3.2 Minimum Culvert Diameter

Since small diameter culverts are often plugged by sediment and debris and difficult to maintain, culverts in the public right-of-way should have diameters of no less than 15 inches. Larger culverts will be easier to maintain and more effective for drainage over the long term than smaller culverts. Private driveway culverts may have diameters as small as 12 inches.

4.3.3 Limited Headwater

If there is limited headwater to drive the design flow through the culvert, consider options such as oversizing the culvert barrel, lowering the inlet invert, using an alternate cross section (arch or elliptical), or a combination of the preceding to increase the discharge rate.

If the inlet invert is lowered, consider the potential for upstream headcutting and scour from the acceleration of flow into the culvert. Evaluate the use of a drop structure, riprap or other protective measures, along with headwalls, apron, and toe walls, to stabilize the area around the culvert entrance and prevent upstream propagation of headcutting.

4.3.4 Culvert Outlet

Check the outlet velocity for potential downstream scour during the major storm. If scour is indicated, which is frequently the case, refer to the *Outlet Protection* section of this chapter (Section 6.0). Inadequate culvert outlet protection is a common problem. Erosion undermines the culvert outlet and degrades the downstream channel unless adequate culvert outlet protection is provided.

4.3.5 Minimum Velocity

To minimize sediment deposition in the culvert, maintain a minimum velocity of 3 feet per second during the average annual flow event. If the minimum velocity is not achieved based on the design slope and average annual peak flow, consider decreasing the culvert diameter, steepening the slope, using a smoother culvert, or a combination of these to increase velocity.

4.3.6 Culvert Shape

Carefully select the shape of culvert based on the characteristics and needs of the stream, providing functionality beyond simply conveyance when feasible. For example, a circular culvert may effectively handle the design peak discharge but could limit the movement of aquatic organisms and sediment or debris, while potentially encroaching the floodplain. In contrast, a sunken-bottom four-sided culvert or three-sided culvert can maintain the natural streambed, improve sediment and debris conveyance, and support fish passage. Arch culverts are also typically compatible with aquatic organism passage and can be used to span the bankfull channel for smaller streams. Box culverts are well suited for passing high flow rates and velocities, while elliptical culverts are often used in situations where vertical cover is a constraint. Where possible, size the width of the culvert to span the bankfull width of the channel to minimize disruptions to sediment transport, decreasing the sediment fall out at the inlet and decreasing the maintenance burden (ICON Engineering, 2025).

5.0 CULVERT INLETS

A culvert's capacity is ultimately determined by the amount of water that can enter the inlet. While engineers often focus on factors such as slope, cross section, hydraulic roughness, and other parameters, it's important to remember the inlet's role in the overall design.

The longer a culvert is, the more important it is to design a hydraulically efficient entrance. A large culvert unable to flow at the design capacity represents wasted investment. Typically, air vents are necessary immediately downstream of the entrance of a long culvert to allow entrained air to escape and to act as breathers should sub-atmospheric pressures develop in the pipe due to high velocities.

Where constraints exist such as limited headwater depth, erosion problems, or where sedimentation is likely, a more efficient inlet may be required to obtain the necessary discharge for the culvert. Conversely, if detention or other temporary water storage upstream from the culvert is desirable, an inlet with more limited capacity may be an economical choice (in such a case, the embankment should effectively be designed as a dam). The design of a culvert, including both the inlet and the outlet, requires a balance between cost, hydraulic efficiency, purpose, and topography at the proposed culvert site.

The entrance coefficient, K_e, a variable in Equation 11-6 and Equation 11-10, is a measure of the hydraulic efficiency at the inlet, with lower values indicating greater efficiency (lower head losses). Table 11-3 provides recommended entrance loss coefficients. Different types of inlets and their suited uses are defined in Section 5.1.

Table 11-3. Entrance loss coefficients (FHWA, 2012)

Type of Structure and Entrance Design	Entrance Loss Coefficient, K_e
Concrete Pipe	
Projecting from fill, socket end (groove-end)	0.2
Projecting from fill, sq. cut end	0.5
Headwall or headwall and wingwalls	
Socket end of pipe (groove-end)	0.2
Square-edge	0.5
Rounded (radius = D/12)	0.2
Mitered to conform to fill slope	0.7
*End-Section conforming to fill slope	0.5
Beveled edges, 33.7° or 45° bevels	0.2
Side- or slope-tapered inlet	0.2
Corrugated Metal Pipe or Arch Pipe	
Projecting from fill (no headwall)	0.9
Headwall or headwall and wingwalls square-edge	0.5
Mitered to conform to fill slope, paved or unpaved slope	0.7
*End-Section conforming to fill slope	0.5
Beveled edges, 33.7° or 45° bevels	0.2
Side- or slope-tapered inlet	0.2
Reinforced Concrete Box	
Headwall parallel to embankment (no wingwalls)	
Square-edged on 3 edges	0.5
Rounded on 3 edges to radius of D/12 or B/12or beveled edges on 3 sides	0.2
Wingwalls at 30° to 75° to barrel	
Square-edged at crown	0.4
Crown edge rounded to radius of D/12 or beveled top edge	0.2
Wingwalls at 10° to 25° to barrel	
Square-edged at crown	0.5
Wingwalls parallel (extension of sides)	
Square-edged at crown	0.7
Side- or slope-tapered inlet	0.2

** Note: "End Sections conforming to fill slope" made of either metal or concrete, are the sections commonly available from manufacturers. From limited hydraulic tests they are equivalent in operation to a headwall in both inlet and outlet control. Some end sections, incorporating a closed taper in their design have a superior hydraulic performance. These latter sections can be designed using the information given for the beveled inlet.*

5.1 TYPES OF INLETS AND APPURTENANT STRUCTURES

5.1.1 Headwalls

Headwalls are used for a variety of reasons, including increasing the inlet efficiency, providing embankment stability, and protecting the embankment from erosion. The relative efficiency of the inlet varies with the pipe material used as well as with the orientation of headwalls and wingwalls relative to the direction of flow entering the culvert. Figure 11-7 illustrates an inlet configuration with a headwall and wingwalls.

5.1.2 Wingwalls

Wingwalls are used where the side slopes of the channel adjacent to the entrance are unstable and/or where the culvert is skewed to the normal channel flow. Wingwalls are often needed to transition from the channel bottom to the embankment slope without creating grades that are too steep. Wingwalls do not provide a large improvement in hydraulic efficiency, regardless of the pipe material used, and therefore, should be justified for reasons other than an increase in hydraulic efficiency. Figure 11-8 illustrates several cases where wingwalls are used. For parallel wingwalls, the minimum distance between wingwalls should be at least 1.25 times the diameter of the culvert.

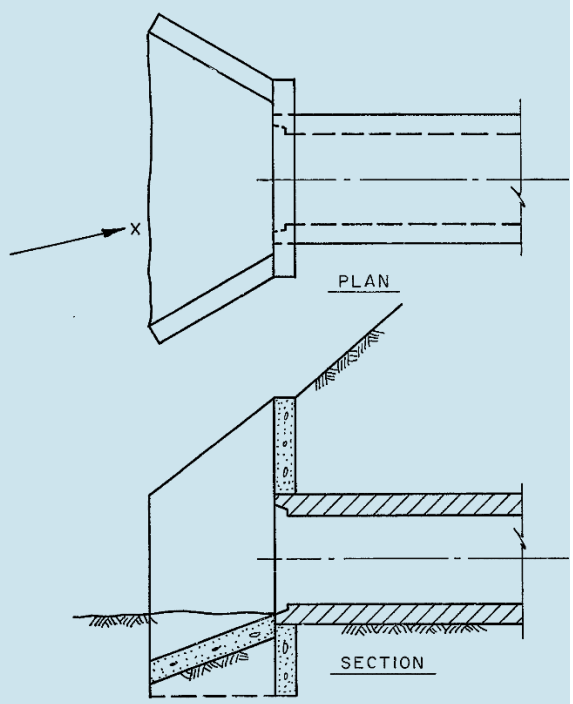

Figure 11-7. Inlet with headwall and wingwalls

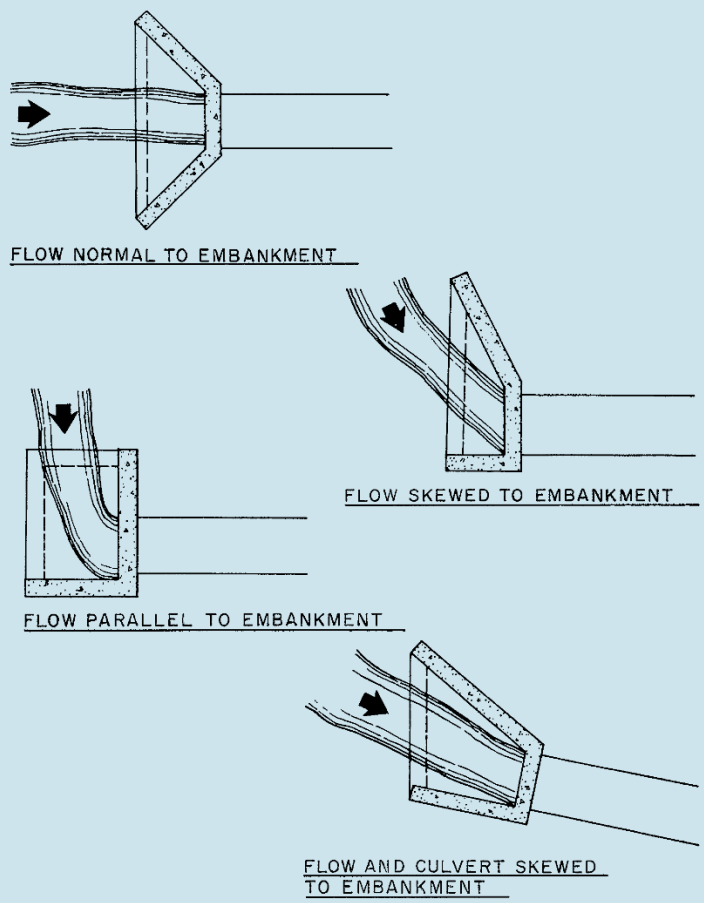

Figure 11-8. Typical headwall-wingwall configurations

5.1.3 Aprons

If high headwater depths are anticipated, or if the approach velocity of the channel will cause scour, provide a short channel apron at the toe of the headwall. Extend this apron at least one pipe diameter upstream from the entrance. The top of the apron should not protrude above the normal streambed elevation.

Design culverts with wingwalls with a concrete apron extending between the walls. Reinforce aprons to control cracking. As illustrated in Figure 11-8, the actual configuration of the wingwalls varies according to the direction of flow and will also vary according to the topographical characteristics of the site. Incorporate a toe wall/cutoff into the apron design to guard against scour.

5.1.4 Special Inlets

A large variety of inlets exist in addition to those described previously. Among these are special end-sections (i.e., flared end sections), which are frequently used at both ends of culverts. This section discusses special inlets for concrete and corrugated metal pipes, two of the most common pipe materials, although similar improved inlets are manufactured for other pipe types. Because of differing requirements due to pipe materials, special end-sections for corrugated metal pipe and concrete pipe are discussed separately. Mitered inlets and inlets for long conduits also are discussed in this section.

Corrugated Metal Pipe

Special end-sections for corrugated metal pipe add little to the overall cost of the culvert and have the advantages of reducing the potential for damage and maintenance requirements compared to a projecting entrance and increased hydraulic efficiency.

Concrete Pipe

As with corrugated metal pipe, concrete flared end-sections (FES) protect the end of the pipe during maintenance activities and may aid in increasing the embankment stability or in retarding erosion at the inlet. When properly designed they can also provide an improved appearance compared to a projecting entrance. The hydraulic efficiency of this type of concrete inlet depends on the geometry of the end-section to be used, as indicated in Table 11-3.

Mitered Inlets

Mitered inlets are simply culvert pipes cut with the slope of the embankment. They are most commonly used with corrugated metal pipes. The hydraulic efficiency of mitered inlets is dependent on the construction procedure used. Uplift is an important factor for a mitered inlet. Do not use mitered inlets with unpaved embankment slopes where the entrance may be submerged to a depth of more than 1.5 times the culvert rise.

Inlets to Long Culverts

While inlets are important in the design of short culverts, such as road crossings, they are even more significant in the economical design of long culverts and pipes. Unused capacity in a long culvert is a wasted investment. Long culverts are costly and require detailed engineering, planning, and design work. The inlets to these culverts are extremely important to the structure's functionality and require special attention.

Most long culverts require special inlet considerations to maximize the flow through the barrel of the culvert. Generally, for longer culverts, hydraulic model testing will result in better and less costly inlet construction. For additional considerations for long culverts, see the inset.

Venting Considerations for Long Culverts

When hydraulic calculations indicate a Froude Number higher than 0.7 for flows up to and including the design flow, or when the culvert's entrance is submerged, the engineer must evaluate the need for adequate air vents along the culvert. Vents are necessary to minimize major pressure fluctuations that can occur if flow becomes unstable. Flow instability can result in negative pressures (less than atmospheric) in the culvert, surging flow, and other issues. Under this condition, air vents can mitigate and reduce structural loads and fluctuating hydraulic capacity in the culvert. Maintenance holes and storm inlets allow air to flow in and out of a culvert as it is filling and emptying. They also provide surface overflow outlets from the culvert when the design flow is exceeded, or the culvert is blocked.

A large rectangular culvert with a special entrance and an energy dissipater at the exit may need a maintenance hole that equipment can be lowered into in case major repair work becomes necessary. This can be a large, grated opening just downstream from the entrance. This grated opening can also serve as an air vent. Equipment may be lowered into the culvert by a crane or A-frame.

A long culvert must be easy to inspect; therefore, maintenance holes are desirable at various locations. If a rectangular culvert is situated under a curb, the maintenance hole may be combined with inlets. Align the opening with the vertical wall of the box to allow rungs in the riser and box to be aligned.

Inlets to Rectangular Culverts

Entrances for rectangular culverts are especially important because the flow must be limited to avoid surcharging the conduit. Surcharging (pressurized flow) can cause the hydraulic grade line to exceed the road elevation, resulting in flooding, and can damage the culvert if not designed for the high velocities and additional pressure of these flow conditions. Special maximum-flow limiting entrances are often used with rectangular conduits. These special entrances should reject flow over the design discharge so that when a flow larger than the design flow occurs, the excess water will flow via other routes, often overland. A combined weir-orifice design is useful for this purpose. A second function of the entrance should be to accelerate the flow to the design velocity of the culvert, usually to meet the velocity requirements for normal depth of flow in the upstream reach of the culvert. For additional considerations for rectangular conduits, see the inset.

Other Considerations for Rectangular Culverts

The use of rectangular culverts with high flow capacity can sometimes have cost advantages over large-diameter pipes. They can also be poured in place, providing flexibility in culvert dimensions. Consider the following when contemplating a rectangular culvert:

Culvert Capacity: The culvert's capacity drops significantly when the water surface reaches its roof since the wetted perimeter dramatically increases. The drop is 20% for a square cross section and more for a rectangular cross section where the width is greater than the height.

Internal Pressure: An obstruction, or even a confluence with another conduit, may cause the flow in a near-full rectangular culvert to strike the roof and choke the capacity. The capacity reduction may then cause the entire upstream reach of the culvert to flow full, with a resulting surge and pressure head increase of sufficient magnitude to cause a structural failure. When structural design has not been based on internal pressure, internal pressures are typically limited to no more than 2 to 4 feet of head. Surges or culvert capacity choking cannot be tolerated if the structure is not designed for the internal pressure resulting from these conditions. Thorough design is required to overcome this inherent potential problem.

Air Entrainment: Entrained air causes a swell in the volume of water and an increase in depth than can cause flow in the culvert to reach the height of the roof with resulting loss of capacity. Therefore, hydraulic design must account for entrained air. In rectangular culverts and circular pipes, flowing water will entrain air at velocities of about 20 ft/sec and higher. Additionally, other factors such as entrance condition, channel roughness, distance traveled, channel cross section, and volume of discharge all have some bearing on air entrainment. Volume swell can be as high as 20% (Hipschman, 1970).

Slope and Alignment: Structural requirements and efficiency for sustaining external loads, rather than hydraulic efficiency, usually control the shape of the rectangular conduit. A rectangular culvert should have a straight alignment and should not decrease in size or slope in a downstream direction. It is desirable to have a slope that increases in a downstream direction as an added safety factor against it flowing full. This is particularly important for supercritical velocities that often exist in long culverts.

Curves and Bends: The analysis of curves in rectangular culverts is critical to ensure adequate hydraulic capacity. When the water surface (normal, standing or reflecting waves) reaches the roof of the culvert, hydraulic losses increase significantly and the capacity drops. Superelevation of the water surface must also be investigated, and allowances must be made for a changing hydraulic radius, particularly in high-velocity flow. Analyze dynamic loads created by the curves to assure structural integrity for the maximum flows the culvert may experience. See the *Hydraulic Structures* chapter of the USDCM.

Projecting Inlets

Do not use projecting inlets (protruding pipes at the inlet). Instead, use headwalls, wingwalls, and flared end sections to maximize efficiency and minimize turbulence, head loss, and erosion. This is especially important for flexible pipe materials (metal or plastic). This condition can cause severe suction and displacement of the pipe.

Improved Inlets

Inlet edge configuration is one of the prime factors influencing the performance of a culvert operating under inlet control. Inlet edges can cause a severe contraction of the flow, as in the case of a thin edge, projecting inlet. In a flow contraction, the effective cross-sectional area of the barrel may be reduced to about one-half of the actual barrel cross-sectional area. As the inlet configuration is improved, the flow contraction is reduced, thus improving the performance of the culvert.

A tapered inlet is a flared culvert inlet with an enlarged face section and a hydraulically efficient throat section. Tapered inlets improve culvert performance by providing a more efficient control section (the throat). However, tapered inlets are not recommended for use with culverts flowing under outlet control because under outlet control, the simple beveled edge is of equal benefit. The two most common improved inlets are the side-tapered inlet and the slope-tapered inlet, as illustrated in Figure 11-9. FHWA's HDS 5 (2012) provides guidance on the design of improved inlets.

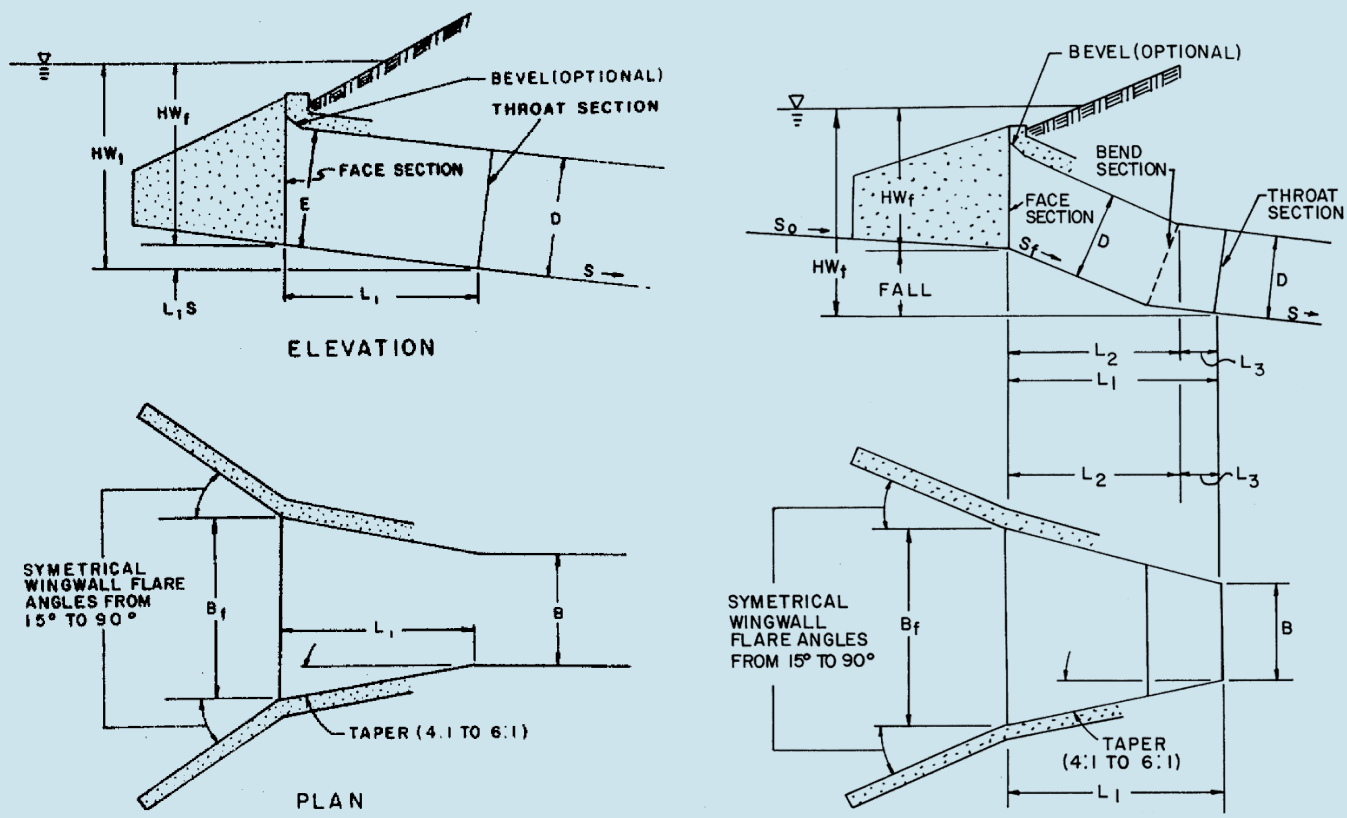

Figure 11-9. Examples of side-tapered and slope-tapered improved inlets

5.2 INLET PROTECTION

Culvert inlets, especially those on live streams, should be evaluated relative to debris control and buoyancy.

5.2.1 Debris Management

Accumulation of debris at a culvert entrance reduces the conveyance capacity of the culvert and increases the headwater depth required to pass the design flow rate. This can create hazardous conditions due to road overtopping, inundation of upstream property, and/or flooding of property. The designer has four general options for addressing the issue of debris plugging a culvert:

- Retain the debris upstream of the culvert.
- Attempt to pass the debris through the culvert.
- Install a bridge to create more cross-sectional area for passage of debris.
- Relocate the crossing to a geomorphically appropriate location where the reach is relatively stable with a consistent gradient and minimal skew in the alignment. Refer to MHFD's *Geomorphically Informed Stream Crossing Structures* guidance document (ICON Engineering, 2025) for additional information.

If the debris is to be retained by an upstream structure or by a grate at the culvert inlet, frequent maintenance will be required. The design of a debris control structure should include a thorough study of the debris problem and should consider the factors listed in the text box below.

Debris Study Considerations

Factors to be considered in a debris study include:

- Type of debris (large woody debris, small woody debris, urban trash, boulders, etc.).
- Quantity of debris and flow rate and volume bulking effects - see Caltrans' *Highway Design Manual, Chapter 810 – Hydrology* for guidance on bulking factors (Caltrans, 2020).
- Alternate overland flow path(s) (under plugged conditions) – the depths and extents of the overland flow path(s) should be quantified to assess potential for hazardous depths and velocities and potential flooding damages.
- Expected changes in type and quantity of debris due to future development of the watershed.
- Velocity in the vicinity of culvert entrance and overflow depths and velocities.
- Maintenance plan for debris removal (during and between events) and safety of maintenance personnel.
- Availability of upstream storage areas with maintenance access.
- Potential for damages due to debris clogging, if protection is not provided.
- Potential safety implications of a grated versus un-grated culvert entrance.

Refer to Hydraulic Engineering Circular No. 9, *Debris Control Structures Evaluation and Countermeasures* (HEC-9, FHWA 2005), when designing debris control structures. The Colorado Water Conservation Board (CWCB)'s *Stream Crossing Assessment and Design for Post-Fire Conditions* fact sheet (CWCB, 2024) also provides guidance related to managing debris at culverts for burned and unburned watershed conditions.

5.2.2 Buoyancy

The forces acting on a culvert inlet vary as the hydrograph rises and falls in a runoff event. When a culvert functions under inlet control, an air pocket forms just inside the inlet, creating a buoyant effect when the inlet is submerged. The buoyancy forces increase with an increase in headwater depth under inlet control conditions. These forces, along with vortices and eddy currents, can cause scour, undermine culvert inlets, and erode embankment slopes, thereby making the inlet vulnerable to failure, especially if deep headwater conditions are present.

In general, installing a culvert in a natural stream channel constricts the normal flow. The constriction is accentuated when the capacity of the culvert is impaired by debris or damage. The large unequal pressures resulting from inlet constriction are, in effect, buoyant forces that can cause entrance failures, particularly on corrugated metal pipe with mitered, skewed, or projecting ends. The failure potential increases with steepness of the culvert slope, depth of headwater, flatness of the fill slope over the upstream end of the culvert, and the depth of the fill over the pipe.

Anchoring the culvert entrance helps to protect against these failures by increasing the deadload on the end of the culvert, protecting against bending damage, and protecting the fill slope from the scour. Use a standard concrete headwall or end wall to help counteract the hydrostatic uplift and to prevent failure due to buoyancy.

Because of a combination of high head on the outside of the inlet and the large region of low pressure on the inside of the inlet, the end of the culvert can experience a large bending moment, which may result in failure. This problem has been noted for culverts under high fills, on steep slopes, and with projecting inlets. Consult with geotechnical and structural engineers under these conditions. In cases where upstream detention storage is necessary and the headwater depth exceeds 20 feet it is better to restrict discharge by reducing the culvert size rather than using an inefficient projecting inlet.

5.3 SAFETY GRATES

Every year in the U.S., multiple people and often children and first responders, die from being swept into culverts that have open entrances. Many of these fatalities could be avoided by providing properly designed and maintained safety grates at hazardous culvert entrances. Small circular pipes (where a person can become stuck in the culvert) and long culverts, especially those with bends that can entrap people, pose some of the most hazardous conditions. This section provides criteria for when safety grates are required, how they should be designed, and how grates should be evaluated along with other potential hazards.

Culvert and Pipe Related Fatalities

MHFD's *Technical Memorandum on Safety Grates Recommendations for Circular Pipes* (MHFD, 2024) includes documentation of nearly 40 fatalities related to pipes and culverts from 1996 – 2024. Of the injuries and deaths documented, most incidents have been related to smaller circular pipes ranging from a 12-inch to 54-inch diameter. In these instances, most victims were either playing in water or attempting to cross ponded water. The victims were primarily children (aged 6 to 17) and first responders. In many of these cases, the pipe opening was unprotected, and victims inadvertently entered or were pulled into the storm drain. In fewer cases, the storm drain opening was protected by a grate; however, the victims were unable to remove themselves from the grate. The total number of occurrences is unknown as there is no official agency that tracks how many Americans get pulled into storm drains or culverts during flood events. ProPublica identified 35 cases since 2015 using news accounts and court records. They reported that 21 of these people died and nearly half of those lost were children (ProPublica 2021).

5.3.1 Culvert Entrances with Design Flows up to 300 CFS

To develop improved criteria for circular culvert entrances, MHFD partnered with Colorado State University's Hydraulics Laboratory (CSU), AECOM, and Larimer County Dive Rescue Team from 2022 to 2024 to conduct flume tests and computational fluid dynamics modeling to assess various culvert grate configurations and determine conditions that limited a person's ability to self-rescue. This study focused on circular culverts. The details of these field tests and hydraulic modeling efforts are detailed in two publications:

- CSU, 2024. Physical Model Flume Tests of Storm Drain Safety Grates.
- AECOM, 2024. Storm Drain Safety Grates: Computational Fluid Dynamics Modeling Report.

MHFD's *Technical Memorandum on Safety Grates Recommendations for Circular Pipes* (MHFD, 2024) provides the results of these studies and criteria for circular pipes, summarized in Table 11-4. Based on this study, smaller circular pipes are especially dangerous. Although the 2024 study did not evaluate rectangular (box) culverts or elliptical pipe entrances, for design flows up to 300 cfs, MHFD recommends treating these similarly to circular entrances.

Table 11-4. Types of safety grate required for circular pipes of varying design discharge and headwater to diameter ratios (HW/D)

Culvert Condition (Design Discharge and Hw/D)	Open Pipe (No Grate)	Prefabricated Flared End Section with Prefabricated Grate	Grate per MHFD Design
Design Discharge < 20 cfs and HW/D ≤ 1.5	suitable	suitable	suitable
20 cfs < Design Discharge < 100 cfs and HW/D ≤ 1.5	not suitable	suitable	suitable
HW/D > 1.5 or 100 cfs < Design Discharge < 300 cfs	not suitable	not suitable	suitable

The MHFD grate design referenced in Table 11-4 is a grate that is offset 12 inches from the face of the pipe opening, has a 1:1 slope, and bar spacing 5-inches clear (Photograph 11-4). The 12-inch offset serves to increase the distance between the culvert entrance and a person, which reduces the force exerted on a person and provides a step to aid in self-rescue or a place for a first responder to stand while assisting a person attempting to remove themselves from the grate. Transverse support bars located at the back of the grate need to be as few as possible, but sufficient to keep the grate from collapsing under full hydrostatic loads. Design grating to satisfy two loading conditions with a deflection of 1/4 inch or less, 1) a uniform load of 100 pounds per square foot and 2) a concentrated load of 200 pounds applied at the center of the span. Figure 11-10 is a conceptual detail of the MHFD Safety Grate.

Photograph 11-4. A safety grate used in the CSU flume study, designed per MHFD criteria.

5.3.2 Design Flows Exceeding 300 CFS including Box Culvert Entrances

For culverts with design discharges exceeding 300 cfs, conduct a site specific analysis considering the factors discussed in this section and included in the inset on the following page to determine if a safety grate is warranted and if so, what type of grate to use. Grates of this size may require specialized structural design due to the weight of the structure and hydraulic forces on the grate.

Always consider the use of safety grates at inlets to culverts and underground pipes where intended or unintended entry by a person could be dangerous. While safety grates help protect the public from entering culverts, on streams with high debris loads, grates can become obstructed, leading to flooding problems and/or safety risks to maintenance staff clearing debris during a flood event. In these situations, a multi-factor decision making approach is useful to consider the hazards posed over the range of flow rates analyzed. The intent is to evaluate hazards associated with a person entering the culvert compared to the hazards related to debris on the grate. This allows decision makers to consider the frequency of various hazards such as drowning, flooding, injury or death of maintenance personnel, hazardous road conditions, and others. If the ultimate decision is to forego a safety grate due to other hazards outweighing the culvert drowning hazard, at a minimum, strongly worded signage must be provided to warn the public. In park settings, also consider how the area around the culvert entrance can be restricted or closed to the public during flood events. Documentation of the decision-making approach and different hazards considered is essential.

Frequently, box culverts are used for high design flows. Many box culverts have sufficient cross-sectional area and short enough lengths that safety grates are not needed. However, for box culverts that are long (cannot see from one end to the other), or those with

Key Findings from Safety Grate Physical Flume Research

- When the force on a human subject exceeds 110 lbf in the flow direction, the subject may find it difficult to free themself from a safety grate.
- A safety grate with a 1:1(horizontal: vertical) slope and 12-inch offset from the face of the pipe orifice was suitable (did not exceed the design threshold of 110 lbf) in all conditions tested in the flume.
- Horizontal bars placed behind the sloped portion of the grate did not increase a person's ability to self-rescue and may restrict mobility during rescue.

bends or potential utility crossings, the risks of entrapment and drowning are much higher. Evaluate the need for a safety grate in these situations.

Photograph 11-5. A grated outlet poses a risk to those that enter the storm drain and requires more frequent maintenance. Evaluate all risks and place grates on an outlet only as a last resort. Photo courtesy of City and County of Denver.

Safety Grate Design

- For design flows 300 cfs and below, refer to Table 11-4 for suitable safety grate configurations.
- For box culverts and circular culverts exceeding 300 cfs, review hazards related to the depth and velocity of flow, frequency and conditions under which the hazard occurs, surrounding site features, the condition of the site during high water (i.e., what will be visible to someone that may be unfamiliar with the site and what will be hidden), the length and size of the culvert, and other similar factors.
- For box culverts where there is not a clear line of sight from the entrance to the exit of the culvert, evaluate the need for a safety grate based on factors including length of culvert, bends and junctions, debris characteristics, outlet conditions, first responder and maintenance personnel access and safety, risk of floodings, and similar considerations.
- For custom safety grates ensure a net open area of 4 times the culvert-entrance area.
- Make bar openings 5-inchs clear to reduce foot entrapment and allow passage of small debris.
- Design a clear opening at the bottom of no more than 5 inches. Where the bottom surface is vegetated or uneven, openings may vary and exceed this dimension. The intent is to reduce potential for a person to be swept under the grate. Where design flow exceeds 300 cfs and debris flows are significant, risk of clogging and overtopping and risks to maintenance personnel may be present. Compare relative risks to determine if a larger clear space at the bottom is needed for debris. Mitigate risks where possible.
- Orient bars on the face of the grate with the direction of flow to minimize hydraulic losses and facilitate maintenance of debris.
- Evaluate hydraulics of the grate to avoid forces that could pin a person to the face of the grate (AECOM, 2024 and Guo et al., 2010). A large, sloped grate anchored well in front of the culvert entrance, such as the MHFD grate, reduces the risk of pinning.
- Provide maintenance access behind the grate. Access could be via a maintenance hole behind the headwall, a hatch within the grate, or a hinged grate. Consider locking the access where appropriate.

5.3.3 Outlet Grating

Evaluate risks to human life and only install grating at the outlet of a culvert or storm drain as a last resort because a person swept into the culvert will be trapped inside the grate where they will face certain death (Photograph 11-5). Additionally, debris will impinge against the grate and cause significant flow capacity reductions and potentially flood upstream areas. Pressurization in the pipe can also result in an unreasonable risk to the health and safety of the public. Where outlet grating cannot be avoided due to other public safety concerns, ensure access into the storm drain system is restricted in all other potential entry locations and install signage to warn of extreme danger if entered.

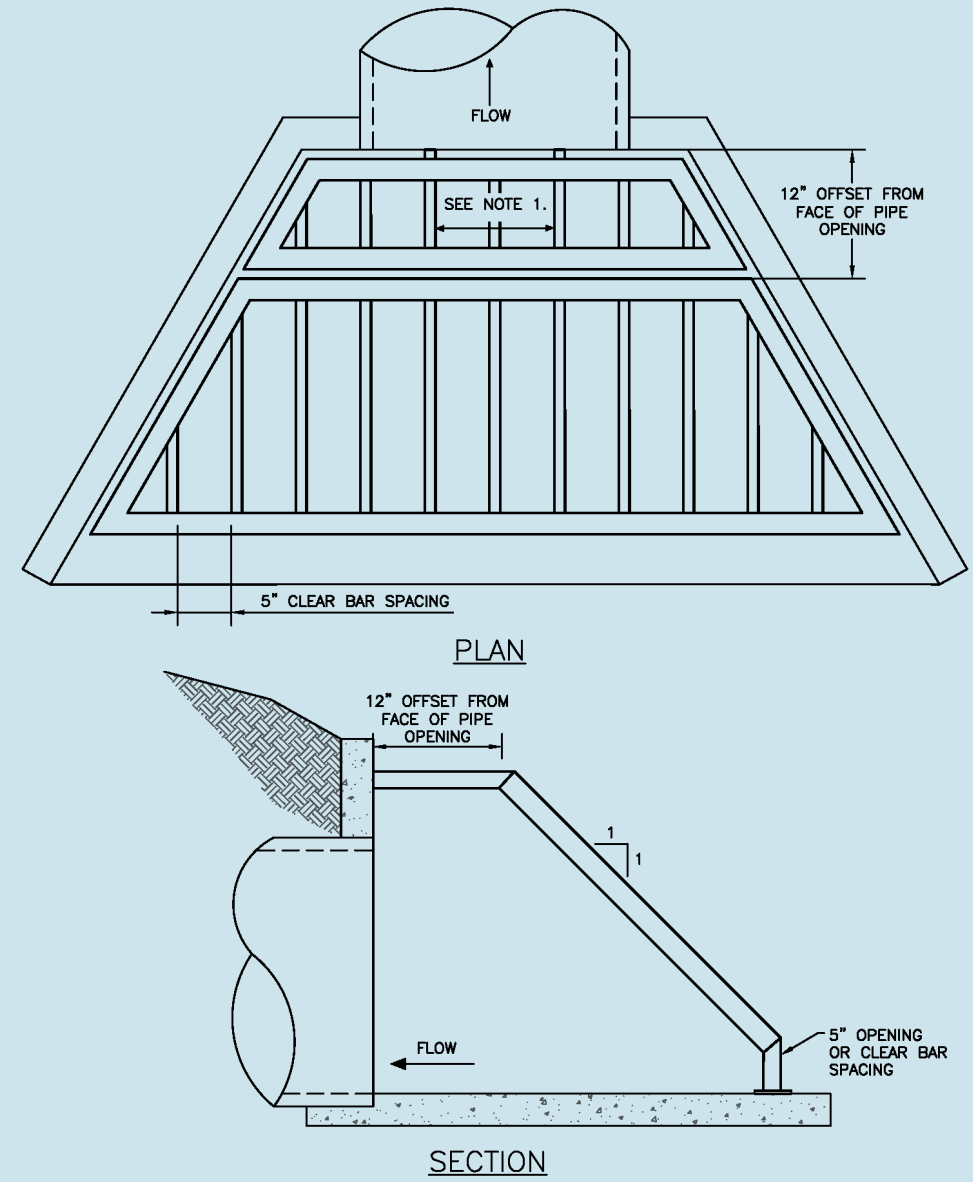

NOTES:

1. DESIGN GRATING TO SATISFY TWO LOADING CONDITIONS WITH A DEFLECTION OF 1/4 INCH OR LESS: 1) A UNIFORM LOAD OF 100 POUNDS PER SQUARE FOOT AND 2) A CONCENTRATED LOAD OF 200 POUNDS APPLIED AT THE CENTER OF THE SPAN.
2. SAFETY GRATES MUST HAVE A NET OPEN AREA (EXCLUDING THE BARS) OF 4 TIMES THE CULVERT–ENTRANCE AREA.
3. ACCESS TO THE PIPE FOR MAINTENANCE AND DEBRIS REMOVAL IS REQUIRED.

Figure 11-10. Conceptual MHFD Safety Grate

5.3.4 Collapsible Grating

MHFD does not generally recommend the use of collapsible grating because of the risk of the mechanism getting jammed or clogged, reducing the effectiveness of the inlet and creating a safety risk. Nevertheless, on larger culverts where grating is found to be necessary, the use of collapsible grating may be desirable. Such grating must be carefully designed from the structural standpoint so that collapse is achieved with a hydrostatic load of approximately one-half of the maximum allowable headwater. The collapse of the grate should be such that it clears the waterway opening adequately to permit the inlet to function properly.

5.3.5 Upstream Debris Collectors

In lieu of a collapsible grate and where a safety hazard exists, a grate for debris collection situated a reasonable distance upstream from the actual inlet is often satisfactory. This type of grating may be a series of vertical pipes or posts embedded in the approach channel bottom. If blocking of this grating occurs, the backwater effect causes water to flow over the top of the grating and into the culvert with only minimal upstream backwater effect. The grating must not be so high as to cause the water to rise higher than the maximum allowable elevation.

6.0 OUTLET PROTECTION

Photograph 11-6. Energy dissipation and outlet protection are essential to promote channel stability.

The high velocity of flow through a culvert often creates the potential for scour at culvert outlet and mitigation against erosion is required (Photograph 11-6). This section provides background information and speaks to the complexity of this transitional area. See the *Hydraulic Structures* chapter for detailed discussion and details of outlet protection practices.

Compared to the stream, flow in a culvert barrel is usually confined to a lesser width and greater depth. This results in increased velocity and potential erosion as flow exits the barrel. Turbulence and erosive eddies form as the flow expands into the downstream channel. However, the velocity and depth of flow at the culvert outlet and the velocity distribution upon reentering the stream are not the only factors that must be considered.

The characteristics of the stream bed and bank material, velocity, and depth of flow in the stream at the culvert outlet (tailwater), and the amount of sediment and other debris in the flow are all contributing factors to scour. Scour prediction is not an exact science due to the variability of flow rates both between different events and within a single runoff event, as well as the challenges in evaluating the hydraulics of rapidly changing flow.

As discussed in the *Hydraulic Structures* chapter, riprap channel expansions and concrete aprons stabilize the transition and redistribute or spread the flow. Barrel outlet expansions operate in a similar manner. Headwalls and cutoff walls protect the integrity of the fill. At some locations, use of a rougher culvert material may alleviate the need for a special outlet protection device by limiting velocities in the barrel of the culvert. When outlet velocities are high enough to create excessive downstream problems, consider using energy dissipation devices such as stilling basins, streambed level dissipators, riprap basins and aprons, drop structures, or stilling wells. Design information for the general types of energy dissipators is provided in the *Hydraulic Structures* chapter of the USDCM and in *Hydraulic Design of Energy Dissipators for Culverts and Channels* (HEC-14, FHWA, 2006).

7.0 BRIDGES

7.1 GENERAL

Photograph 11-7. Bridges for a shared-use path.

Bridges are used to carry roadways, railroads, shared-use paths (Photograph 11-7), and utilities over surface waters. In some cases smaller bridges may behave hydraulicly like culverts if they become pressurized or submerged. If a bridge is not sized properly, overtopping and flooding will occur, leading to public hazards, erosion damage, and possible structural failure. All bridge projects involve an assumption of a certain level of risk typically determined by the owner or local jurisdiction based on the design event(s) specified for different street classifications. This section provides a brief overview of hydraulic design of bridges and includes references for additional design guidance. Structural design is not addressed in this manual, refer to the American Association of State Highway and Transportation Officials (AASHTO) Standard Specifications for Highway Bridges (AASHTO, 2002) for this information.

There are many references for bridge hydraulics. A key source of information is the FHWA. To view a list of FHWA references go to: http://www.fhwa.dot.gov/engineering/hydraulics/library_listing.cfm. Be sure to use the most recent version of a publication as FHWA, CDOT, and AASHTO periodically update criteria.

Some of the key references for bridge hydraulics published by FHWA and others include:

- FHWA, *Hydraulic Design of Safe Bridges*, Hydraulic Design Series No. 7 (HDS 7), 2012.
- FHWA *Highways in the River Environment: Roads, Rivers, and Floodplains*, Second Edition, HEC-16, 2023.
- FHWA, *Highways in the River Environment: Floodplains, Extreme Events, Risk, and Resilience*, Second Edition, HEC-17, 2016.
- FHWA, *Evaluating Scour at Bridges*, Fifth Edition, HEC-18, 2012.
- FHWA, *Stream Stability at Highway Structures*, Fourth Edition, HEC-20, 2012.
- FHWA, *Design of Bridge Deck Drainage*, HEC-21, 1993.
- FHWA, *Bridge Scour and Stream Instability Countermeasures Experience, Selection, and Design Guidance*, Volumes 1 and 2, Third Edition, HEC-23, 2009.
- CDOT, 2019. *Drainage Design Manual, Chapter 10: Bridges*.
- AASHTO, *Highway Drainage Guidelines, Chapter 7: Hydraulic Analysis for the Location and Design of Bridges*, 2007.

Most roadway bridges are designed to pass the 100-year flood event. However, other types of bridges (such as for shared-use paths) may allow for more frequent overtopping. Verify the design event(s) for the bridge with the owner and local government. If a bridge is located within a regulatory floodplain, analyze the effects of the bridge on upstream water surface elevations and velocities through the structure using HEC-RAS or comparable calculations. An advantage of using HEC-RAS for hydraulically sizing a bridge is that the program can also evaluate scour. Contact the local government to determine floodplain permitting requirements. At a minimum a floodplain development permit will be required, and in many cases a CLOMR/LOMR will be needed.

7.2 BACKWATER AND HYDRAULIC ANALYSIS

To the extent feasible, design bridge openings and embankments to minimize impacts to the flow characteristics in the stream channel and floodplain. Bridge abutments and embankment fills in the floodplain and piers in the floodway constrict flow and cause a backwater effect upstream. Most bridges are designed to pass design flows with freeboard between the design upstream water surface elevation and the low chord of the bridge; however, backwater effects may affect upstream structures and sediment transport characteristics through the bridge. For purposes of regulatory floodplain modeling and backwater analysis, analyze subcritical flow conditions. When needed for scour evaluation, use a mixed flow regime to evaluate maximum velocities. HEC-RAS is recommended for analysis of bridge hydraulics and backwater effects, as it incorporates the latest hydraulic and scour calculations from FHWA.

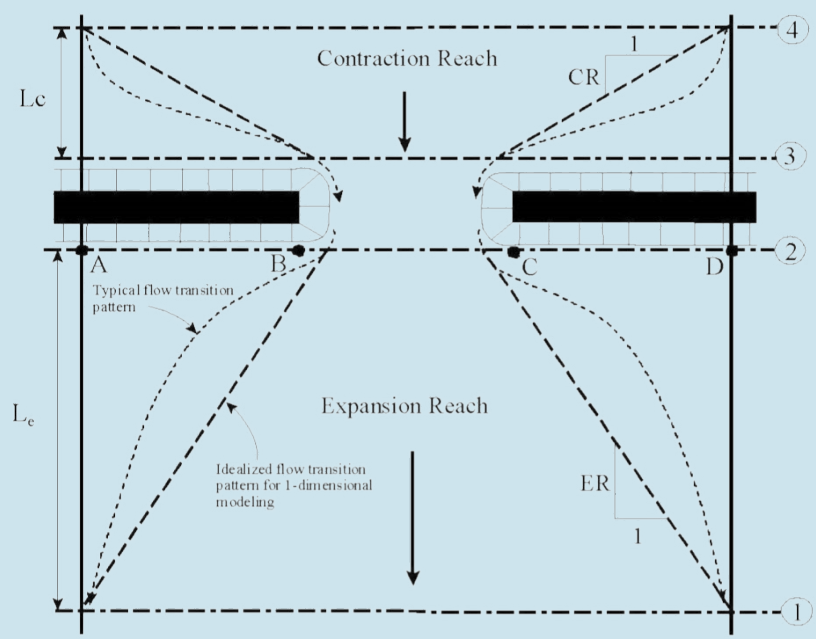

Figure 11-11. Hydraulic cross section locations
(Source: HEC-RAS Hydraulic Reference Manual)

The HEC-RAS User's Manual and Hydraulic Reference Manual (available through the USACE's HEC RAS website) provide a thorough description of the input parameters required for the model and the technical basis for calculations. One of the most fundamental aspects of modeling a bridge (or a culvert) is the layout of the cross sections upstream and downstream of the bridge. Figure 11-11 and Figure 11-12 illustrate the proper layout of cross sections at a bridge. This layout is needed to represent the contraction and expansion of the flow as it enters and leaves the bridge. The contraction and expansion zones create ineffective flow areas to either side of the bridge opening for a relatively short distance upstream and downstream, as illustrated in Figure 11-12. Increase expansion and contraction coefficients to account for additional energy losses due to rapid change in velocities for cross sections upstream and downstream of the bridge. See the HEC-RAS Hydraulic Reference Manual for guidance on cross section locations, contraction and expansion ratios (CR and ER in Figure 11-11), ineffective flow areas, and contraction and expansion coefficient adjustments.

7.3 FREEBOARD

Unlike culverts, which are typically designed with a headwater elevation above the top of the structure, bridges are designed to have freeboard between the design water surface elevation and the low chord of the bridge. Freeboard for bridges is critical because the heavy debris carried in a major flood can permanently damage the structure if it is not passed through the bridge, potentially leaving an important roadway out of service.

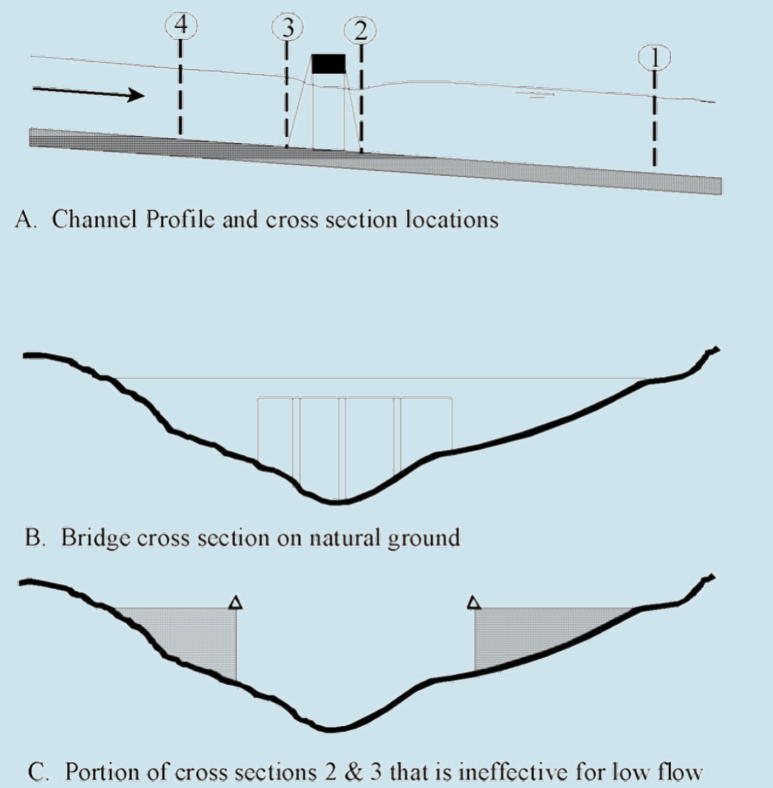

Figure 11-12. Cross section locations and ineffective flow areas *(Source: HEC-RAS Hydraulic Reference Manual)*

Bridge freeboard is the vertical distance between a design water surface elevation and the low chord of the bridge superstructure. Freeboard accounts for a reasonable degree of uncertainty of the design flow rate and allows for passage of ice, debris, and waves during a flood event. Criteria for bridge freeboard vary from 1-foot to 4-feet in Colorado depending on the jurisdiction and risk of debris specific to the stream. CDOT recommends minimum freeboard of 2 feet for low-to-moderate debris streams and 4 feet or more for high-debris streams (CDOT, 2019). Add the freeboard to the water surface elevation approximately 50 to 100 feet upstream of the face of the bridge to get the bottom or low-girder elevation (CDOT, 2019). Additionally, some criteria define freeboard based on the geometry of the bridge (e.g., CDOT provides figures for measuring freeboard for bridges with a vertical curve and continuous grade). When the local government does not have bridge freeboard criteria, refer to CDOT, CWCB, or AASHTO and confer with the local government to determine appropriate freeboard criteria (CDOT 2019, CWCB 2008, AASHTO 2002).

7.4 BRIDGE SCOUR ANALYSIS

The increased flow velocities at a bridge constriction often lead to scour, which is of particular concern because it can undermine a bridge's foundations and potentially cause collapse of the structure. Established methodologies for estimating scour at bridges and designing countermeasures are contained in FHWA HEC-18, HEC-20, and HEC-23 (available at www.fhwa.dot.gov/engineering/hydraulics/).

The methods described in the 2001 version of HEC-18 (FHWA, 2001) and HEC-20 are incorporated into the HEC-RAS computer program in its Hydraulic Design/Scour module. The program automatically calculates many of the input parameters for scour routines based on the program's hydraulic output around the bridges. For gradation inputs, collect samples of bed and bank material upstream of, through and downstream of the structure and use a representative value or perform a sensitivity analysis if there is wide variability in gradation data.

When using HEC-RAS for scour calculations, it is critical to understand the input including cross section and output parameters, applicability and limitations of different scour methods, and whether the resulting values are reasonable. This can depend on the way data are imported for bridge geometry, bank stations, and other input variables.

When using HEC-RAS for scour calculations, it is critical to understand the input and output parameters, applicability and limitations of different scour methods, and whether the resulting values are reasonable. This can depend on the way data are imported for bridge geometry, bank stations, and other input variables. Localized bridge scour is comprised of:

- Contraction scour
- Local pier scour
- Local abutment scour

These three components are added together to arrive at a final scour envelope, as illustrated in Figure 11-13, an example of HEC-RAS scour output for a bridge with six piers and sloping abutments.

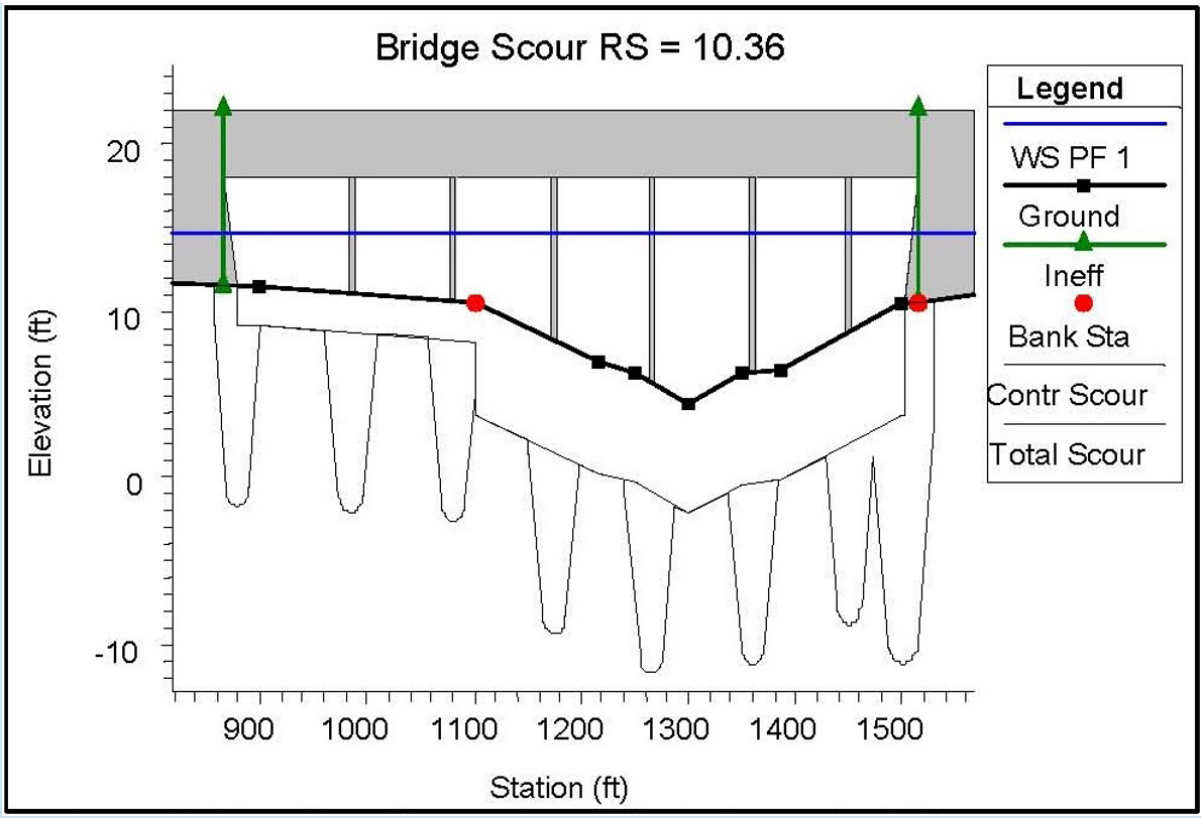

Figure 11-13. Example of scour envelope, as calculated with HEC-RAS
(Source: HEC-RAS Hydraulic Reference Manual)

FHWA recommends calculation of scour for piers and abutments with the absence of riprap at roadway bridges. Reliance upon riprap for overall bridge stability and foundation design is not advised. However, riprap is often used as a scour countermeasure. FHWA provides guidance on selecting and designing scour countermeasures, including riprap at bridge piers and abutments in HEC-23 *Bridge Scour and Stream Instability Countermeasures, Experience, Selection, and Design Guidance* (FHWA, 2009).

It is important to note that the above methodology for calculating scour assumes that unconsolidated alluvial material makes up the channel bottom within the scour envelope. If bedrock is located within the scour envelope, or especially if bedrock is exposed at the surface of the channel bottom, other methodology should be used to determine the bedrock erodibility. The Erodibility Index Method was developed to evaluate scour in bedrock and is described in *Scour Technology: Mechanics and Engineering Practice* (Annandale, 2006).

A scour analysis must address long-term patterns of channel change. An understanding of fluvial geomorphology is important in determining this portion of the analysis. This includes evaluation of sediment transport, patterns of channel invert or overbank lowering (degradation), patterns of deposition (aggradation), and lateral migration. Aggradation can lead to loss of capacity under a bridge, and degradation can cause undermining of a bridge foundation. In the case of long-term degradation of a channel, consider grade control structures downstream of the bridge. However, local scouring around a bridge's structural elements can still occur even with grade control structures. Long term aggradation may indicate the need for upstream bed and bank stabilization measures to reduce sediment loading. While the latest versions of HEC-18, HEC-20, and HEC-23 provide the basis for evaluating scour, stream stability, and countermeasures for bridges, FHWA and the National Cooperative Highway Research Program (NCHRP) continue to study scour at bridges.

Ongoing Bridge Scour Research

Resources and information on updates to bridge scour methods and criteria can be found at:

- FHWA Scour Technology Program: http://www.fhwa.dot.gov/engineering/hydraulics/scourtech/index.cfm.
- NCHRP Research Field 24 – Foundations and Scour: http://www.trb.org/NCHRP/NCHRPProjects.aspx. Many of these advancements were incorporated into the 2012 version of HEC-18.

8.0 DESIGN EXAMPLE

This section demonstrates culvert sizing using HY-8, the method applicable to many culvert sizing applications that are not affected by upstream or downstream hydraulic structures. This example sizes a culvert given the following information:

- $Q_{5\text{-yr}}$ = 20 cfs
- $Q_{100\text{-yr}}$ = 35 cfs
- L = 95 ft
- Maximum allowable H_W = 5288.5 ft
- Culvert shape is circular
- Channel invert elevations:
  - Inlet = 5283.5 ft
  - Outlet = 5281.5 ft
- Tailwater depth, 5-year storm = 2.5 ft
- Tailwater depth, 100-year storm = 3.0 ft
- Excavated trapezoidal channel with gravel (uniform section, clean), 2:1 side slopes, bottom width = 10 ft

This section guides the user through the typical steps to set up and run a model in HY-8. To begin, start a new project by adding a “Crossing” with the information in Table 11-5. Figure 11-14 shows the input interface window. Once all the inputs are entered, the culvert may be analyzed using “Analyze Crossing” button near the bottom right corner of the box shown in Figure 11-14. This should generate an output screen that looks like Figure 11-15. If any critical input values are missing, the program will not execute properly.

HY-8 provides extensive output for modeled culverts and has options for exporting reports and generating rudimentary figures. Please refer to the HY-8 User’s Manual for further interpretation of model output and options for presenting results.

Table 11-5. HY-8 program inputs

Parameter	Value	Source
Min Flow (cfs)	0.0	User-specified, usually 0.0 for developing a performance curve
Design Flow (cfs)	$Q_{5\text{-}yr}$ or $Q_{100\text{-}yr}$	User specified based on local criteria
Max Flow (cfs)	35	Usually set for event that overtops roadway
Channel Type	Trapezoidal Channel	Select channel type to represent downstream channel characteristics
Bottom Width (ft)	10	Downstream channel geometry
Side Slope (H:V) (_:1)	2	Downstream channel geometry
Channel Slope	0.03 ft/ft	Downstream channel geometry
Manning's n (channel)	0.025	Downstream channel bed and bank roughness characteristics
Channel Invert Elevation (ft)	5283.5	Downstream channel topography or grading
Roadway Profile Shape	Constant Roadway Elevation	Civil design input, must be coordinated with bridge opening height
First Roadway Station (ft)	0	Civil design input, set at 0 for preliminary calculations, use road stationing for final design
Crest Length (ft)	100	Civil design input, often approximated as broad weir for preliminary calculations, use topography/grading for final design
Crest Elevation (ft)	5288.5	Civil design input, must be coordinated with bridge opening height
Roadway Surface	Paved	Civil design, paved typical
Top Width (ft)	150	Civil design, can be approximated for preliminary design based on culvert length and roadway side slopes
Shape	Circular	Design parameter
Material	Concrete	Design parameter
Diameter	2.0 feet	Design parameter
Embedment Depth	0	Design parameter
Manning's n	0.012	User specified based on material
Culvert Type	Straight	User specified, HY-8 has multiple options
Inlet Configuration	Square edge with headwall (Ke=0.5)	User specified, HY-8 has multiple options
Inlet Depression?	No	Use specified, depression may be used to increase inlet capacity
Inlet Station	0	Typically set at 0 for preliminary analysis, use stream stationing for final design
Inlet Elevation	5283.5	User specified
Outlet Station	95	Inlet station + length of culvert
Outlet Elevation	5281.5	User specified
Number of Barrels	1	User specified, HY-8 can model multiple barrels

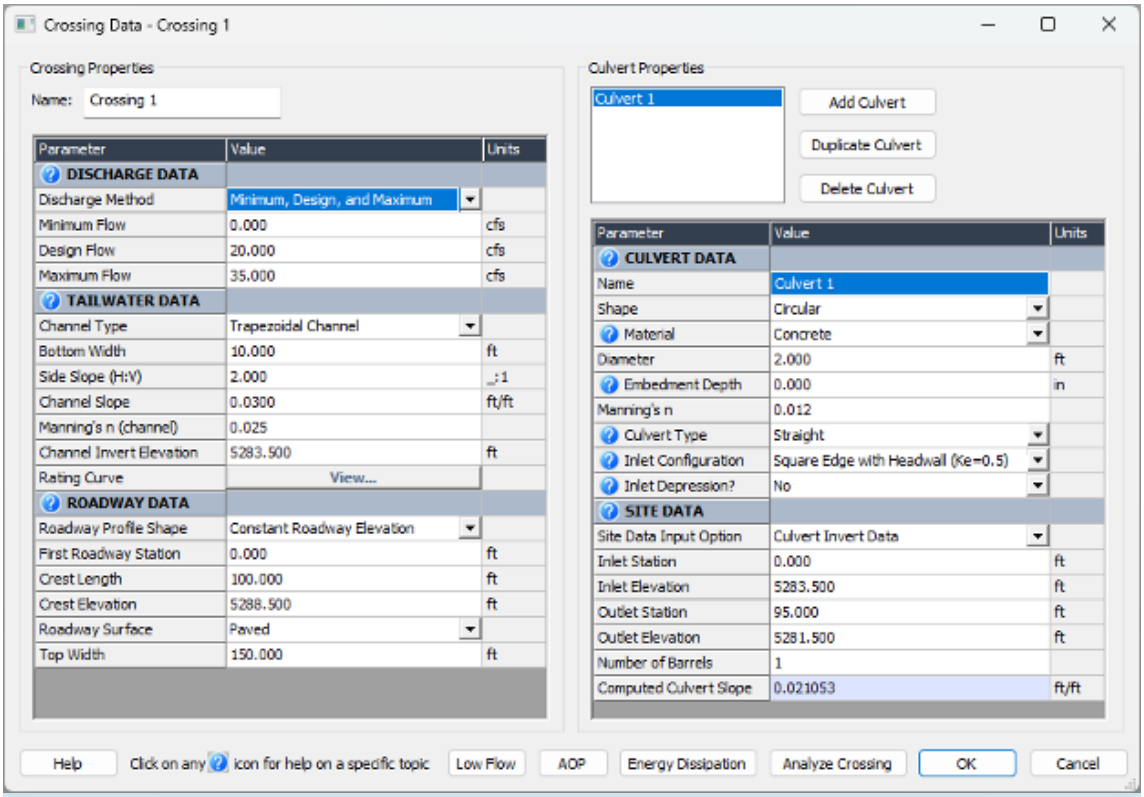

Figure 11-14. Adding a crossing in HY-8

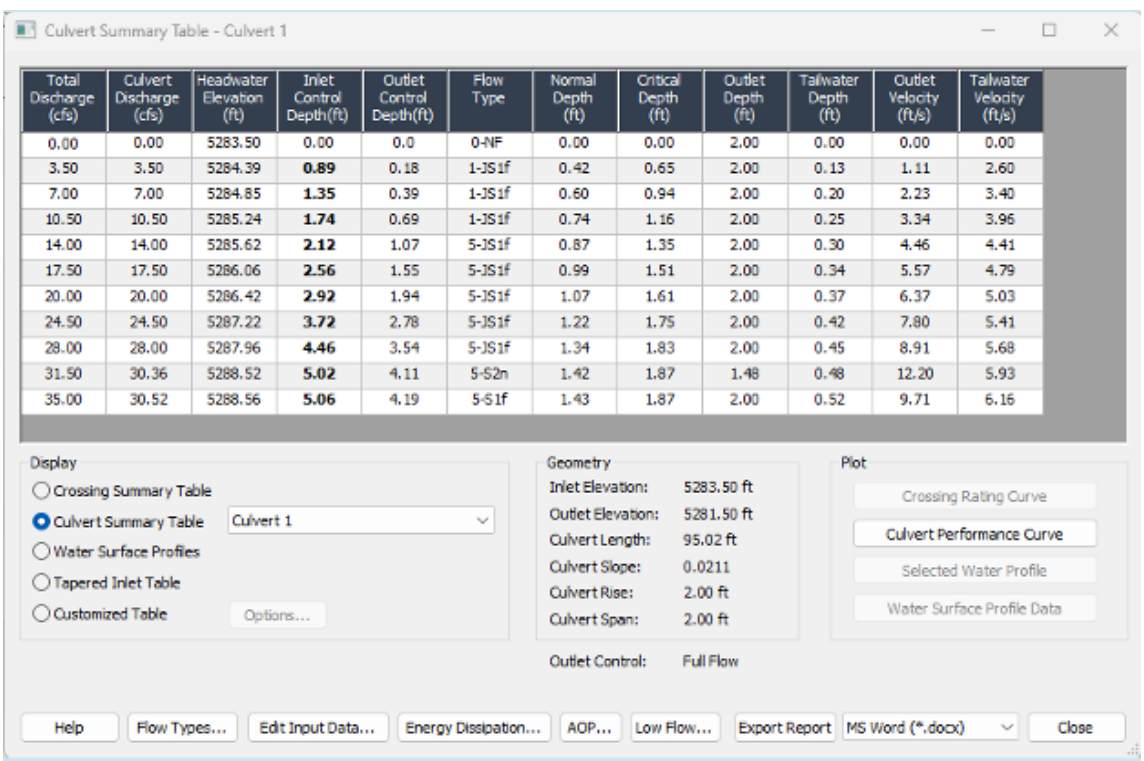

Total Discharge (cfs)	Culvert Discharge (cfs)	Headwater Elevation (ft)	Inlet Control Depth(ft)	Outlet Control Depth(ft)	Flow Type	Normal Depth (ft)	Critical Depth (ft)	Outlet Depth (ft)	Tailwater Depth (ft)	Outlet Velocity (ft/s)	Tailwater Velocity (ft/s)
0.00	0.00	5283.50	0.00	0.0	0-NF	0.00	0.00	2.00	0.00	0.00	0.00
3.50	3.50	5284.39	**0.89**	0.18	1-JS1f	0.42	0.65	2.00	0.13	1.11	2.60
7.00	7.00	5284.85	**1.35**	0.39	1-JS1f	0.60	0.94	2.00	0.20	2.23	3.40
10.50	10.50	5285.24	**1.74**	0.69	1-JS1f	0.74	1.16	2.00	0.25	3.34	3.96
14.00	14.00	5285.62	**2.12**	1.07	5-JS1f	0.87	1.35	2.00	0.30	4.46	4.41
17.50	17.50	5286.06	**2.56**	1.55	5-JS1f	0.99	1.51	2.00	0.34	5.57	4.79
20.00	20.00	5286.42	**2.92**	1.94	5-JS1f	1.07	1.61	2.00	0.37	6.37	5.03
24.50	24.50	5287.22	**3.72**	2.78	5-JS1f	1.22	1.75	2.00	0.42	7.80	5.41
28.00	28.00	5287.96	**4.46**	3.54	5-JS1f	1.34	1.83	2.00	0.45	8.91	5.68
31.50	30.36	5288.52	**5.02**	4.11	5-S2n	1.42	1.87	1.48	0.48	12.20	5.93
35.00	30.52	5288.56	**5.06**	4.19	5-S1f	1.43	1.87	2.00	0.52	9.71	6.16

Figure 11-15. HY-8 output

9.0 CULVERT CHECKLIST

Criterion/Requirement	✓
Minimum culvert diameter of 15 inches.	
HW/D ratio does not exceed limits in Table 11-1, unless justified and adequate measures are implemented to protect embankment. Limit HW/D to 1.5 or less when possible.	
Evaluate the need for safety grating for culverts: Follow criteria in Table 11-4 for circular culverts For box culverts, consider safety grates in cases where there is not a clear line of site from the entrance to the exit or when conditions within the culvert (bends, obstructions, vertical drops) or at the outlet are likely to trap or seriously injure a person.	
Refer to the latest hydraulic design guidance from CDOT, FHWA, and AASHTO as appropriate for design.	
When a culvert is sized such that the overlying roadway overtops during large storms, check the depth of cross flow with the *Streets, Inlets, and Storm Drains* chapter.	
Provide adequate outlet protection in accordance with Section 6.0 of this chapter and the *Hydraulic Structures* chapter. Refer to the latest guidance in HEC-23 for additional information on countermeasures for scour.	

10.0 REFERENCES

AECOM, 2024. Storm Drain Safety Grates: Computational Fluid Dynamics Modeling Report. Available at www.mhfd.org.

American Iron and Steel Institute (AISI), 1980. Modern Sewer Design, Washington D.C.

AASHTO, 2002. Standard Specifications for Highway Bridges, 17th Edition. AASHTO: Washington, D.C.

AASHTO, 2007. Highway Drainage Guidelines. Chapter 7: Hydraulic Analysis for the Location and Design of Bridges. AASHTO: Washington, D.C.

Annandale, G. W., 2006. Scour Technology: Mechanics and Engineering Practice. McGraw-Hill Civil Engineering Series.

Caltrans, 2020. *Highway Design Manual, Seventh Edition, Chapter 810- Hydrology*. Sacramento, CA: California Department of Transportation

CDOT, 2019. Drainage Design Manual. Denver, CO: Colorado Department of Transportation.

CDOT, 2023. Structure Selection Report QA Checklist. https://www.codot.gov/programs/bridge/bridge-manuals/form-letters/structure-selection-report-qa-checklist-final.pdf

CSU, 2024. Physical Model Flume Tests of Storm Drain Safety Grates. Available at www.mhfd.org

CWCB, 2008. Colorado Floodplain and Stormwater Criteria Manual. Denver, CO: Colorado Department of Natural Resources, Colorado Water Conservation Board.

CWCB, 2024. Wildfire Ready Watersheds: Stream Crossing Assessment and Design Considerations for Post-Fire Conditions Fact Sheet. Denver, CO: Colorado Department of Natural Resources, Colorado Water Conservation Board. https://www.wildfirereadywatersheds.com/resource

FHWA, 1993. Design of Bridge Deck Drainage, Hydraulic Engineering No. 21. Washington, DC: U.S. Department of Transportation, Federal Highway Administration.

FHWA, 2001. Evaluating Scour at Bridges, Hydraulic Engineering Circular No. 18, Fourth Edition. Washington, DC: U.S. Department of Transportation, Federal Highway Administration.

FHWA, 2005. Debris Control Structures Evaluation and Countermeasures. Hydraulic Engineering Circular No. 9. Publication No. FHWA-IF-04-016. Washington, DC: U.S. Department of Transportation, Federal Highway Administration.

FHWA, 2006. Hydraulic Design of Energy Dissipators for Culverts and Channels. Hydrologic Engineering Circular No. 14, Third Edition. Washington, DC: U.S. Department of Transportation, Federal Highway Administration.

FHWA, 2009. Bridge Scour and Stream Instability Countermeasures, Experience, Selection, and Design Guidance. Hydraulic Engineering Circular No. 23, Third Edition. Volumes 1 and 2. Washington, DC: U.S. Department of Transportation, Federal Highway Administration.

FHWA, 2010. Culvert Design for Aquatic Organism Passage. Hydraulic Engineering Circular No. 16. Washington, DC: U.S. Department of Transportation, Federal Highway Administration.

FHWA, 2012. Evaluating Scour at Bridges, Hydraulic Engineering Circular No. 18, Fifth Edition. Washington, DC: U.S. Department of Transportation, Federal Highway Administration.

FHWA, 2012. Hydraulic Design of Safe Bridges, Hydraulic Design Series No. 7. Washington, DC: U.S. Department of Transportation, Federal Highway Administration.

FHWA, 2012. Hydraulic Design of Highway Culverts, Hydraulic Design Series No. 5. Washington, DC: U.S. Department of Transportation, Federal Highway Administration.

FHWA, 2012. Stream Stability at Highway Structures, Hydraulic Engineering Circular No. 20, Fourth Edition. Washington, DC: U.S. Department of Transportation, Federal Highway Administration.

FHWA, 2016. Highways in the River Environment – Floodplains, Extreme Events, Risk and Resilience, Hydraulic Design Series No. 17. Washington, DC: U.S. Department of Transportation, Federal Highway Administration.

FHWA, 2023. Highways in the River Environment: Roads, Rivers, and Floodplains, Hydraulic Design Series No. 16. Washington, DC: U.S. Department of Transportation, Federal Highway Administration.

FHWA, 2023. Highway Hydrology: Evolving Methods, Tools, and Data, Hydrologic Engineering Circular No. 19. Publication No. FHWA-HIF-23-050. Washington, DC: U.S. Department of Transportation, Federal Highway Administration.

FHWA, 2024. Aquatic Organism Passage at Highway Crossings: An Implementation Guide. FHWA Publication Number: HIF-24-054. Washington, DC: U.S. Department of Transportation, Federal Highway Administration.

FHWA, 2024. HY 8 Culvert Hydraulic Analysis Program, Version 8.0.0. Washington, DC: U.S. Department of Transportation, Federal Highway Administration.

Guo, J., Jones, J. and T.A. Earles, 2010. Method of Superimposition for Suction Force on Trash Rack. Journal of Irrigation and Drainage Engineering. J. Irrig. Drain. Eng. ASCE. 136. 10.1061/(ASCE)IR.1943-4774.0000253.

Hipschman, R.,1970. Erosion Protection for the Outlets of Small and Medium Culverts. Electronic Theses and Dissertations. 3784. https://openprairie.sdstate.edu/etd/3784

ICON Engineering, 2025. Geomorphically Informed Stream Crossing Structures. Available at www.mhfd.org

MHFD, 2024. Technical Memorandum on Safety Grates Recommendation for Circular Pipes. Available at www.mhfd.org

Propublica, 2021. Storm Drains Keep Swallowing People During Floods. Retrieved April 26, 2024 at https://www.propublica.org/article/storm-drains-keep-swallowing-people-during-floods.

Union Pacific Engineering Department, March 26, 2019. General Conditions and Specifications.

Union Pacific Railroad – BNSF Railway, January 5, 2016. Guidelines for Railroad Grade Separation Projects. Bridge Standards.

U.S. Army Corps of Engineers, 2010. Hydrologic Engineering Center, River Analysis System (HEC-RAS) User's Manual and Hydraulic Reference Manual.

U.S. Fish and Wildlife Service, 2024. Culvert Design Guidelines for Ecological Function.

Washington Department of Fish and Wildlife, 2003. Design of Road Culverts for Fish Passage.